UNISOC®

Unisoc Confidential For longcheer Informal

SC2721G

Hardware Design Guide

WWW.UNISOC.COM

Revision history

Version	Date	Notes
V1.1	24/08/2023	Optimize document description
V1.0	25/03/2018	Initial version for the first release

Unisoc Confidential For Longcheer Informal

Keyword

Keyword: Power, Audio, USB

Unisoc Confidential For longcheer Informal

Unisoc Confidential For longcheer Informal

Contents

01 General Introduction

02 Power

03 Audio

04 USB

05 Others

UNISOC

For longcheer Informal
Unisoc Confidential

01

General Introduction

General Introduction 1/9

UNISOC

Unisoc Confidential For longcheer Informal

PMIC General Feature

- Integrated 5 buck converters
- Integrated 22 LDOs
- Support linear charge control, the charge current lower than 700mA is suggested for best thermal performance
- Support battery voltage up to 4.4V
- Support LDO mode vibrator
- Support LDO mode and current sink mode for keypad LED
- Support two-key (EXTRST & PBINT) 7s reset and one-key (PBINT) 7s reset, and two-key reset mode is default
- Support Sudden Momentary Power Loss (SMPL)
- Support fuel gauge
- Support battery temperature detection
- Support battery present detection
- Support Type-C 1.2, and support positive and negative insertion detection

General Introduction 2/9

Unisoc Confidential For longcheer Informal

PMIC General Feature (Continued)

- Support USB download without battery
- Support BC1.2
- Support Ear-Jack-Res detection
- Support 256-bit e-Fuse
- Support Ultra Low RTC
- Support 12-bit AUXADC
- Support RGB LED driver
- Support one channel 200mA capability current sink
- Support 32K-less with another IC, such as transceiver in reference phone
- Support 2-in-1 speaker
- Integrated Class D/Class AB speaker PA

General Introduction 3/9

UNISOC

Pin List

Ball No.	Ball Name	Description
Audio analog interface		
M5	MIC_BIAS	Microphone Bias LDO output
N7	MIC1_P	Microphone1 positive input
P7	MIC1_N	Microphone1 negative input
L7	MIC2_P	Microphone2 positive input
L6	MIC2_N	Microphone2 negative input
M6	HEADMIC_BIAS	Headphone Bias LDO output
N5	HEADMIC_N	Headphone microphone negative input
N6	HEADMIC_P	Headphone microphone positive input
L8	HEADMIC_IN_DET	Headphone button detect
K8	HEADSET_L_INT	Headphone insert detect
N8	HP_R	Headphone right output
P8	HP_L	Headphone left output
L9	RCV_N	Receiver negative output
K9	RCV_P	Receiver positive output
N9	SPK_P	Speaker positive output
N10	SPK_N	Speaker negative output
N4	AVDD_VB	Voice band power analog LDO
M8	AVDD_VBO	Voice band power analog LDO
P5	AMP_VCOM	Class-G ground, tied to JACK ground
P4	VBAT_AUD	VBAT power input for audio
P10	VBAT_PA	VBAT power input for audio speaker PA
J7	AGND_VB	Voice band power analog LDO ground
J8	AGND_VBO	Voice band power analog LDO ground
M9	VSS_PA	Audio speaker PA ground

Ball No.	Ball Name	Description
ADI Interface		
D9	ADI_SCLK	ADI interface synchronize clock
A9	ADI_D	ADI interface synchronize data
Audio digital interface		
A12	AUD_SCLK	Audio interface synchronize clock
B10	AUD_ADSYNC	Audio interface RX data synchronize signal
A11	AUD_ADD0	Audio interface RX data
B9	AUD_DASYNC	Audio interface TX data synchronize signal
C9	AUD_DAD0	Audio interface TX data bit0
D10	AUD_DAD1	Audio interface TX data bit1
A to D interface		
C12	EXT_RST_B	A die reset D die, low active
C11	ANA_INT	A die interrupt to D die, high active
D12	CHIP_SLEEP	A die into deep sleep mode input signal, high active
D11	CLK32K	A die output to D die, 32K clock
E13	PTESTO	A die output to D die, product test mode
L2	CLK26M	Adie 26M clock input
B11	DCDC_CPU_EN	DCDCCPU enable input
B12	EXT_XTL_EN0	External wake up input 0
B13	EXT_XTL_EN1	External wake up input 1
A14	EXT_XTL_EN2	External wake up input 2
B14	EXT_XTL_EN3	External wake up input 3
32K interface		
G1	32K_KO	32K crystal clock output when 32K mode, 32K clock input when 32K-Less mode
G2	32K_KI	32K crystal clock input
J1	DCXO_LOWCUR	DCXO low power mode output signal
H2	VBAT_BK	Backup button cell
J2	VDDRTC	LDO for RTC power output

Unisoc Confidential For Longcheer Internal

General Introduction 4/9

UNISOC

Pin List (Continued)

Unisoc Confidential For longcheer Informal

Ball No.	Ball Name	Description
TSX interface		
K1	XTAL_OUT	NC
K2	XTAL_IN	NC
K4	TSEN_VREFP	NC
L4	TSEN_IN	NC
L5	TSEN_VREFN	NC
E9	T_DIG	NC
M1	REF_OUT0	NC
N1	REF_OUT1	NC
N2	REF_OUT2	NC
P2	REF_OUT3	NC
K3	VSS_TSX_1	TSX ground, need to be tied to ground independently
M2	VSS_TSX_2	TSX ground, need to be tied to ground independently
N3	VSS_TSX_3	TSX ground, need to be tied to ground independently
Strap pin		
M3	TSX_MODE	TSX selection pin, 0: TSX; 1: un-TSX
F3	RTC_MODE	RTC mode selection pin, 0: crystal; 1:32K-less
F4	OPTION	Platform selection pin, 0: VDDARM (1.05V) & VDDCORE (1.05V/0.8V); 1: VDDARM (0.9V) & VDDCORE (0.9V/0.7V)
Aux ADC		
J11	ADCI1	Aux ADC input channel 1
H12	ADCI2	Aux ADC input channel 2
H13	ADCI3	Aux ADC input channel 3
J12	ADCI4	Aux ADC input channel 4
System		
F8	PBINT	Power on 1
E7	PBINT2	Power on 2
F9	PRODT	Product test mode select, 0: normal; 1: test
K12	EXTRSTN	System reset input
J14	VPP	Efuse power input
Power input		
A2	VBAT_DRV	VBAT power input for DCDC
A3	VBAT_DRV	VBAT power input for DCDC
A8	VBAT_DRV	VBAT power input for DCDC
B2	VBAT_DRV	VBAT power input for DCDC
B3	VBAT_DRV	VBAT power input for DCDC
B8	VBAT_DRV	VBAT power input for DCDC
C14	VBAT_DRV	VBAT power input for DCDC
C15	VBAT_DRV	VBAT power input for DCDC
F10	VBATA	VBAT power input for LDO
F11	VBATA	VBAT power input for LDO
G10	VBATA	VBAT power input for LDO
G11	VBATA	VBAT power input for LDO
H7	VBATB	VBAT power input for LDO

Ball No.	Ball Name	Description
DCDC output		
A6	LX_CORE	DCDCCORE output LX
A7	LX_CORE	DCDCCORE output LX
B7	LX_CORE	DCDCCORE output LX
D8	FB_CORE	DCDCCORE voltage feed back positive
D7	FB_CORE_N	DCDCCORE voltage feed back negative
A4	LX_CPU	DCDCCPU output LX
A5	LX_CPU	DCDCCPU output LX
B5	LX_CPU	DCDCCPU output LX
D4	FB_CPU	DCDCCPU voltage feed back positive
E4	FB_CPU_N	DCDCCPU voltage feed back negative
B1	LX_GEN1V85	DCDCGEN1V85 output LX
G5	VDCDC_GEN1V85	DCDCGEN1V85 voltage feed back and LDO power input
C1	LX_GEN1V4	DCDCGEN1V4 output LX
C2	LX_GEN1V4	DCDCGEN1V4 output LX
H5	VDCDC_GEN1V4	DCDCGEN1V4 voltage feed back and LDO power input
H6	VDCDC_GEN1V4	DCDCGEN1V4 voltage feed back and LDO power input
B15	LX_WPA	DCDCWPA output LX
D13	WPA_APCIN	DCDCWPA APC input
E11	FB_WPA	DCDCWPA voltage feed back and power output when bypass mode
LDO output		
E14	VDDSIM0	LDO output for SIM card power
E12	VDDSIM1	LDO output for SIM card power
H14	VDDSIM2	LDO output for SIM card power
F12	VDDCAMA	LDO output for camera analog power
E15	VDDCAMMOT	LDO output for camera moto power
H15	VDDWIFIPA	LDO output for Wi-Fi PA power
J3	VDDDCXO	LDO output for DCXO, default voltage is 1.8V
G12	VDDEMMCCORE	LDO output for EMMC core power, default voltage is 3.0V
G13	VDDSD	LDO output for SD card power, default voltage is 3.0V
G14	VDDSDIO	LDO output for SD IO power, default voltage is 3.0V
G15	VDD28	LDO output, default voltage is 2.8V
F14	VDDUSB33	LDO output for USB power, default voltage is 3.3V

General Introduction 5/9

UNISOC

Pin List (Continued)

Unisoc Confidential For Longcheer Informal

Ball No.	Ball Name	Description
VIB and Keypad LED		
N11	VDDVIBR	Vibrator sink and output pin
P11	VDDKPLED	Keypad LED sink pin
LDO from DCDCGEN1V85		
F2	VDDRF18	LDO output for RF transceiver IO power, default voltage is 1.8V
H4	VDDCON	LDO output for connectivity power
D1	AVDD18	DCDCLDO power output for analog
D2	VDDCAMIO	LDO output for camera IO power, default voltage is 1.8V
LDO from DCDGEN1V4		
F1	VDDMEM	LDO output for LPDDR2/3 power, default voltage is 1.2V
E2	VDDMEM_FB	VDDMEM LDO voltage feed back
G4	VDDRF1V25	LDO output for RF transceiver analog power, default voltage is 1.25V
J4	VDDCAMD	LDO output for camera digital power
RGB LED sink input		
L13	RGB_IB0	RGB LED input0
M13	RGB_IB1	RGB LED input1
M14	RGB_IB2	RGB LED input2
Type-C Interface		
L10	CC1	Type-C CC1 detect pin
M11	CC2	Type-C CC2 detect pin
L12	SW	Type-C switch output pin
Sink Interface		
L11	FLASH_IB	Current sink input
Charge		
N14	VCHG	Charge voltage detect input
N15	VDRV	Charge driver control voltage of external PMOS
P13	ISENSE	Current sense input
P14	VBAT_SENSE	Battery terminal sensing, tied to positive terminal of battery as close as possible
K13	CHG_PD	Charge power down output

Ball No.	Ball Name	Description
BC1.2		
K14	DMIN	USB DM input from Ddie
K15	DPIN	USB DP input from Ddie
L14	DMOUT	USB DM output
L15	DPOUT	USB DP output
Fuel Gauge		
J10	BAT_DET	Battery detect pin
N12	SENSE_N	Fuel gauge negative input pin
N13	SENSE_P	Fuel gauge positive input pin
Ground		
G7	VSS	Ground
G8	VSS	Ground
G9	VSS	Ground
H8	VSS	Ground
H9	VSS	Ground
J9	VSS	Ground
B4	VSS_DRV	Ground
B6	VSS_DRV	Ground
D3	VSS_DRV	Ground
D5	VSS_DRV	Ground
D6	VSS_DRV	Ground
D14	VSS_DRV	Ground
D15	VSS_DRV	Ground
E5	VSS_DRV	Ground
C4	VSS_DRV	Ground
C6	VSS_DRV	Ground
NC		
A1	NC	NC
A15	NC	NC
P1	NC	NC
P15	NC	NC

General Introduction 6/9

Package Information

Unisoc Confidential For longcheer Informal

SC2721G 5.8mm × 6.2mm Pinout

	1	2	3	4	5	6	7	8	9	10	11	12	13	14	15	
A	NC	VBAT_DRV	VBAT_DRV	LX_CPU	LX_CPU	LX_CORE	LX_CORE	VBAT_DRV	ADI_D		AUD_ADD0	AUD_SCLK		EXT_XTL_EN2	NC	A
B	LX_GEN1V85	VBAT_DRV	VBAT_DRV	VSS_DRV	LX_CPU	VSS_DRV	LX_CORE	VBAT_DRV	AUD_DASYNC	AUD_ADSYNC	DCDC_CPU_EN	EXT_XTL_EN0	EXT_XTL_EN1	EXT_XTL_EN3	LX_WPA	B
C	LX_GEN1V4	LX_GEN1V4		VSS_DRV		VSS_DRV			AUD_DAD0		ANA_INT	EXT_RST_B		VBAT_DRV	VBAT_DRV	C
D	AVDD18	VDDCAMIO	VSS_DRV	FB_CPU	VSS_DRV	VSS_DRV	FB_CORE_N	FB_CORE	ADI_SCLK	AUD_DAD1	CLK32K	CHIP_SLEEP	WPA_APCIN	VSS_DRV	VSS_DRV	D
E		VDDMEM_FB		FB_CPU_N	VSS_DRV		PBINT2		T_DIG		FB_WPA	VDDSIM1	PTESTO	VDDSIM0	VDDCAMMOT	E
F	VDDMEM	VDDRF18	RTC_MODE	OPTION				PBINT	PRODT	VBATA	VBATA	VDDCAMA		VDDUSB33		F
G	32K_KO	32K_KI		VDDRF1V25	VDCDC_GEN1V85		VSS	VSS	VSS	VBATA	VBATA	VDDEMMCCORE	VDDSD	VDDSDIO	VDD28	G
H		VBAT_BK		VDDCON	VDCDC_GEN1V4	VDCDC_GEN1V4	VBATB	VSS	VSS			ADCI2	ADCI3	VDDSIM2	VDDWIFIPA	H
J	DCXO_LOWCUR	VDDRTC	VDDDCXO	VDDCAMD			AGND_VB	AGND_VBO	VSS	BAT_DET	ADCI1	ADCI4		VPP		J
K	XTAL_OUT	XTAL_IN	VSS_TSX_1	TSEN_VREFP				HEADSET_L_INT	RCV_P			EXTRSTN	CHG_PD	DMIN	DPIN	K
L		CLK26M		TSEN_IN	TSEN_VREFN	MIC2_N	MIC2_P	HEADMIC_IN_DET	RCV_N	CC1	FLASH_IB	SW	RGB_IB0	DMOUT	DPOUT	L
M	REF_OUT0	VSS_TSX_2	TSX_MODE		MIC_BIAS	HEADMIC_BIAS		AVDD_VBO	VSS_PA		CC2		RGB_IB1	RGB_IB2		M
N	REF_OUT1	REF_OUT2	VSS_TSX_3	AVDD_VB	HEADMIC_N	HEADMIC_P	MIC1_P	HP_R	SPK_P	SPK_N	VDDVIBR	SENSE_N	SENSE_P	VCHG	VDRV	N
P	NC	REF_OUT3		VBAT_AUD	AMP_VCOM		MIC1_N	HP_L		VBAT_PA	VDDKPLED		ISENSE	VBAT_SENSE	NC	P
	1	2	3	4	5	6	7	8	9	10	11	12	13	14	15	

General Introduction 7/9

Unisoc Confidential For Longcheer Informal

Package Information (Continued)

SC2721G 5.8mm × 6.2mm POD (BGA)

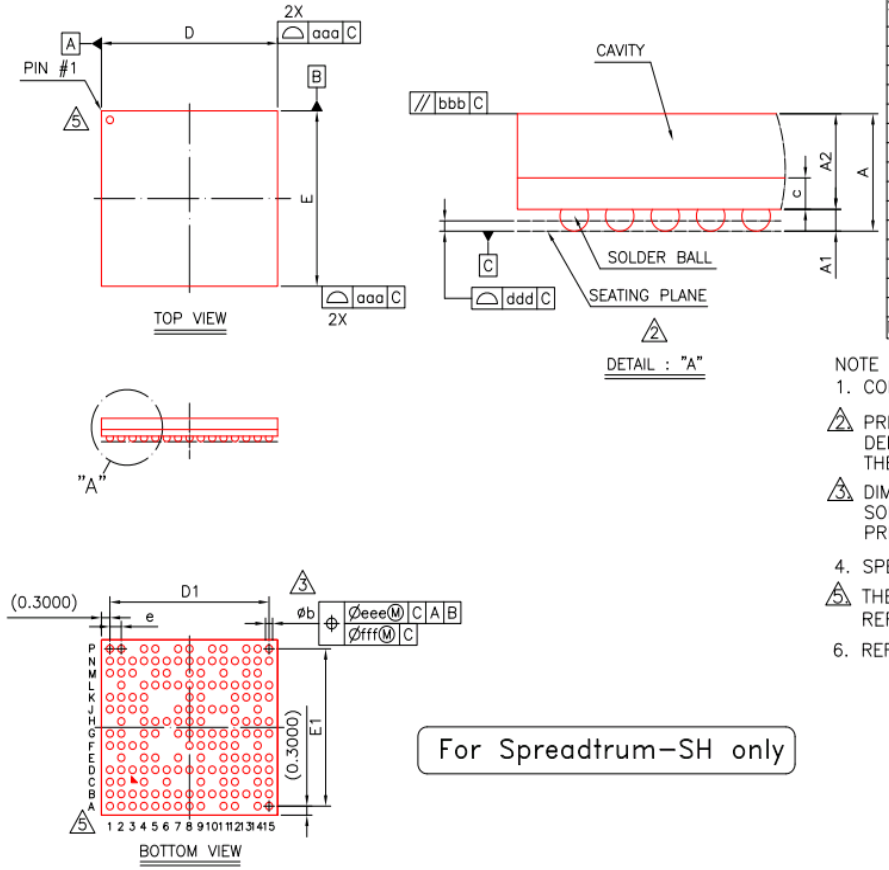

Symbol	Dimension in mm			Dimension in inch		
	MIN	NOM	MAX	MIN	NOM	MAX
A	0.6993	0.7700	0.8500	0.0275	0.0303	0.0335
A1	0.1300	0.1800	0.2300	0.0051	0.0071	0.0091
A2	0.5400	0.5900	0.6400	0.0213	0.0232	0.0252
c	0.1800	0.2200	0.2600	0.0071	0.0087	0.0102
D	6.1000	6.2000	6.3000	0.2402	0.2441	0.2480
E	5.7000	5.8000	5.9000	0.2244	0.2283	0.2323
D1	---	5.6000	---	---	0.2205	---
E1	---	5.2000	---	---	0.2047	---
e	---	0.4000	---	---	0.0157	---
b	0.2000	0.2500	0.3000	0.0079	0.0098	0.0118
aaa	0.1000			0.0039		
bbb	0.0800			0.0031		
ddd	0.0800			0.0031		
eee	0.1500			0.0059		
fff	0.0500			0.0020		
MD/ME	15 / 14					

NOTE :

1. CONTROLLING DIMENSION : MILLIMETER.
2. PRIMARY DATUM C AND SEATING PLANE ARE DEFINED BY THE SPHERICAL CROWNS OF THE SOLDER BALLS.
3. DIMENSION b IS MEASURED AT THE MAXIMUM SOLDER BALL DIAMETER, PARALLEL TO PRIMARY DATUM C.
4. SPECIAL CHARACTERISTICS C CLASS: bbb, ddd
5. THE PATTERN OF PIN 1 FIDUCIAL IS FOR REFERENCE ONLY.
6. REFERANCE DOCUMENT : JEDEC PUBLICATION 95 DESIGN GUIDE 4.5

For Spreadtrum-SH only

TITLE : 166LD FCCSP-C (6.2X5.8 mm) PACKAGE OUTLINE			
APPR.			
PE.		DWG NO.	PC06120
PD.		REV NO.	A
QM.		DATE	11/10/'16
CHK.		DWG.	Kangjing

General Introduction 8/9

UNISOC

Package Information (Continued)

Unisoc Confidential For Longcheer Informal

SC2721G 5.8mm × 6.2mm Land Pattern (BGA)

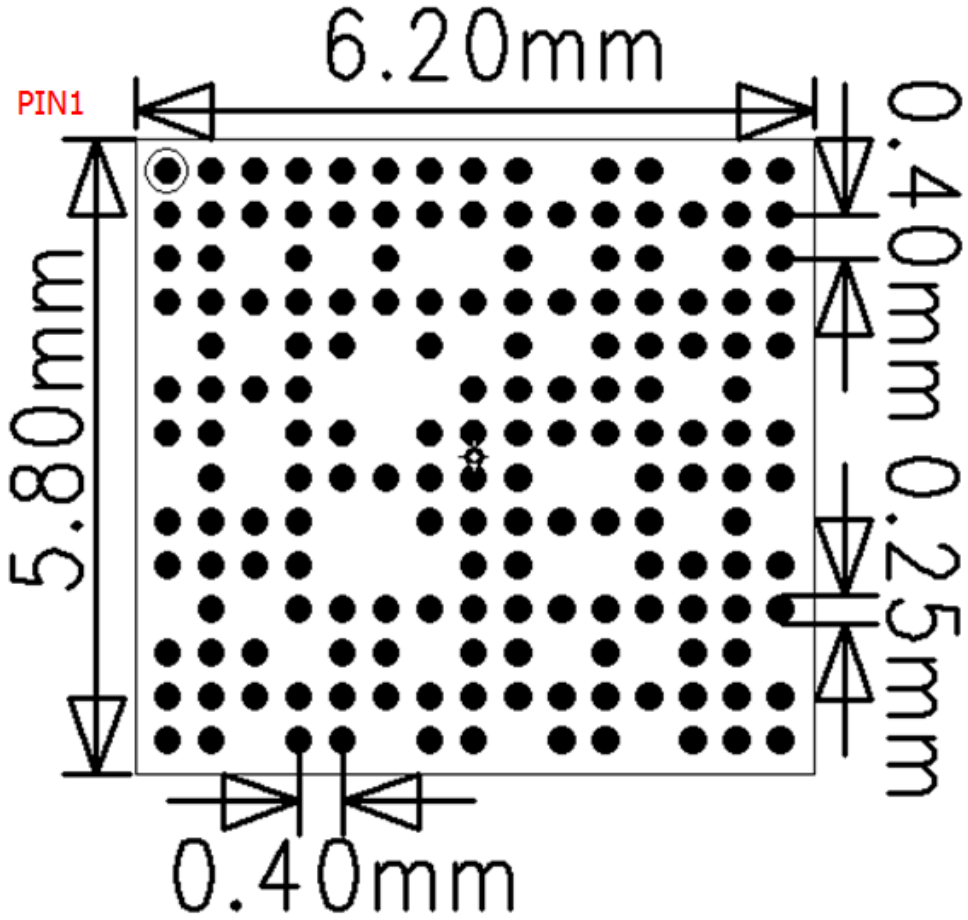

General Introduction 9/9

UNISOC

Package Information (Continued)

Unisoc Confidential For longcheer Informal

SC2721G Ball Information

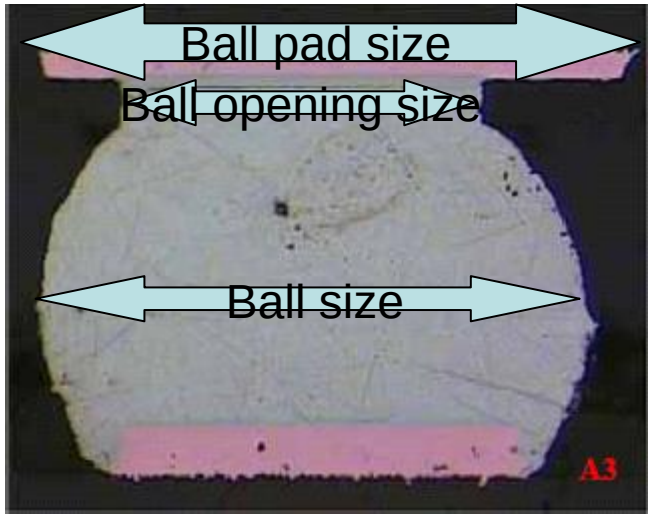

Ball pad size: 0.27mm
Ball opening size: 0.23mm
Ball size: 0.25mm

UNISOC

For longcheer Informal
Unisoc Confidential

02

Power

Power 1/23

VBAT

Unisoc Confidential For longcheer Informal

SC2721G Power Tree

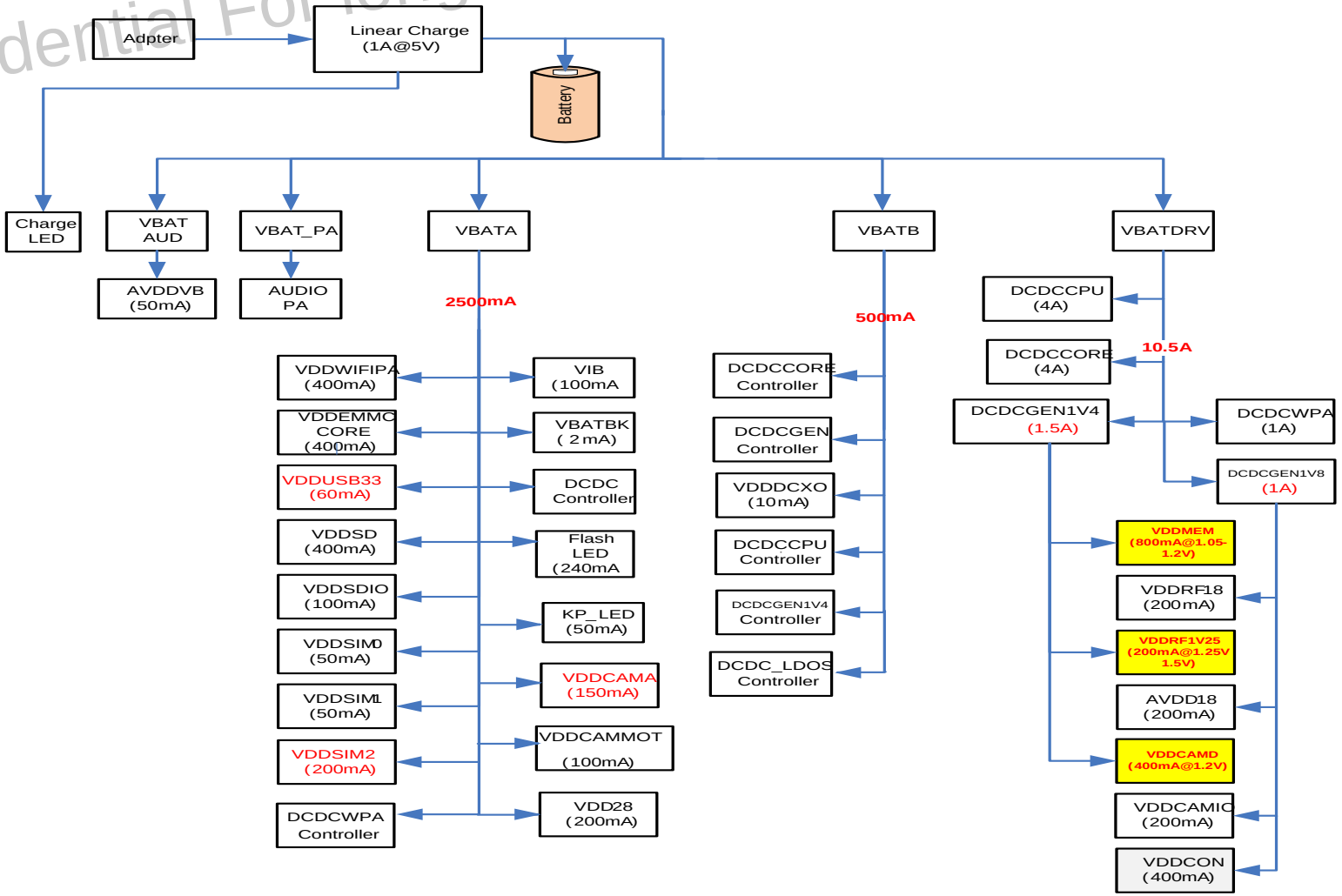

Power 2/23

UNISOC

VBAT (Continued)

Unisoc Confidential For longcheer Informal

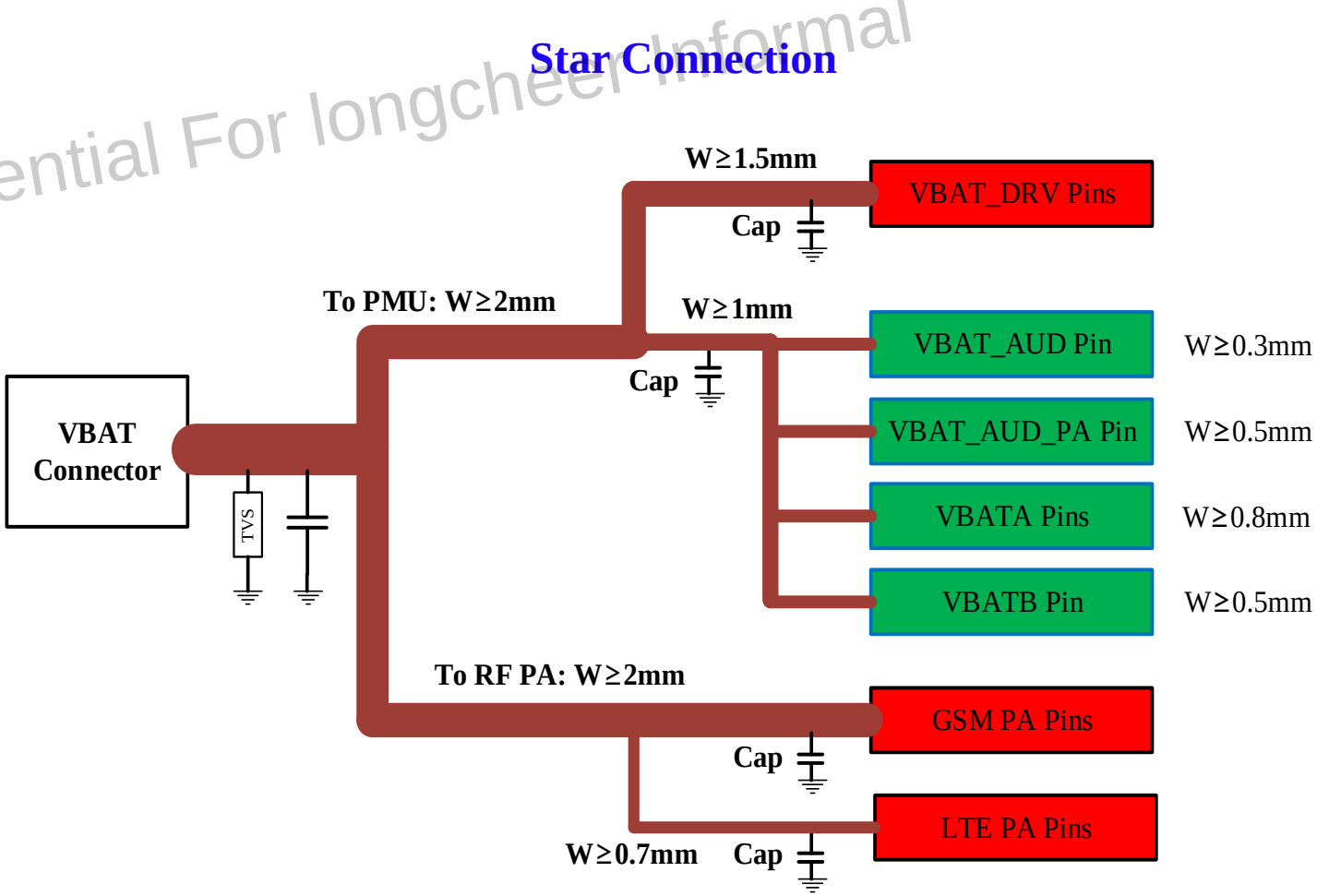

- Star topology should be used in VBAT routing from capacitor to connect each power rail.
- Trace width for each power rail is recommended as above.

Power 3/23

UNISOC

VBAT (Continued)

Unisoc Confidential For longcheer Informal

All the decoupling capacitors shall be placed near SC2721G.

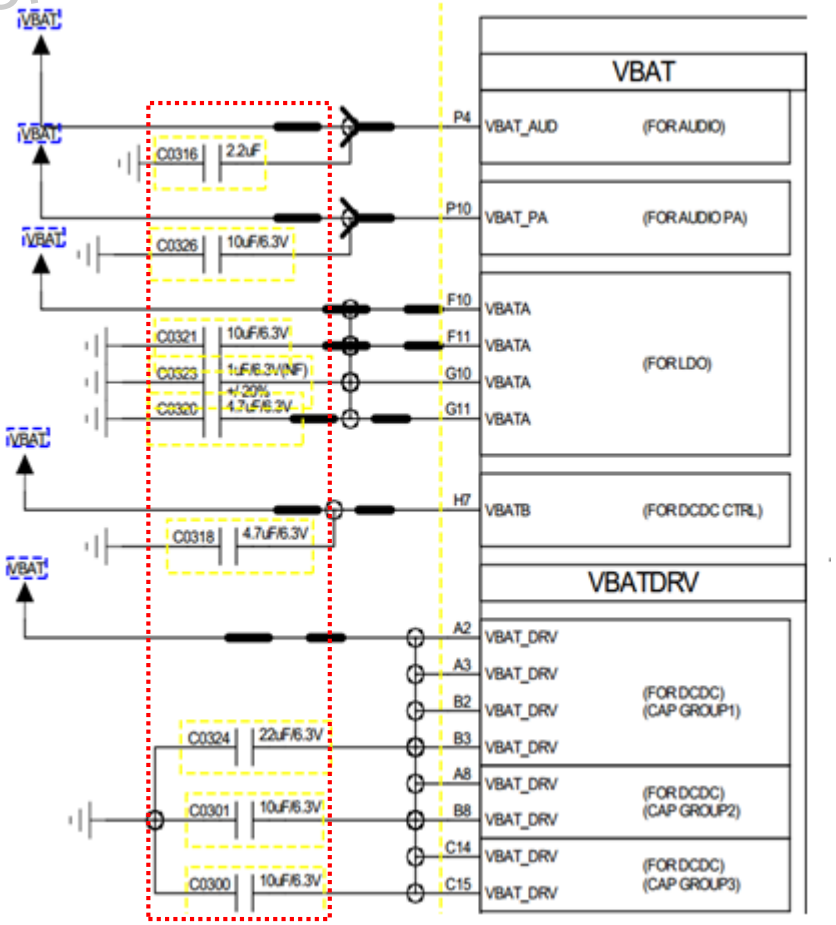

Capacitor GND on Layer 2

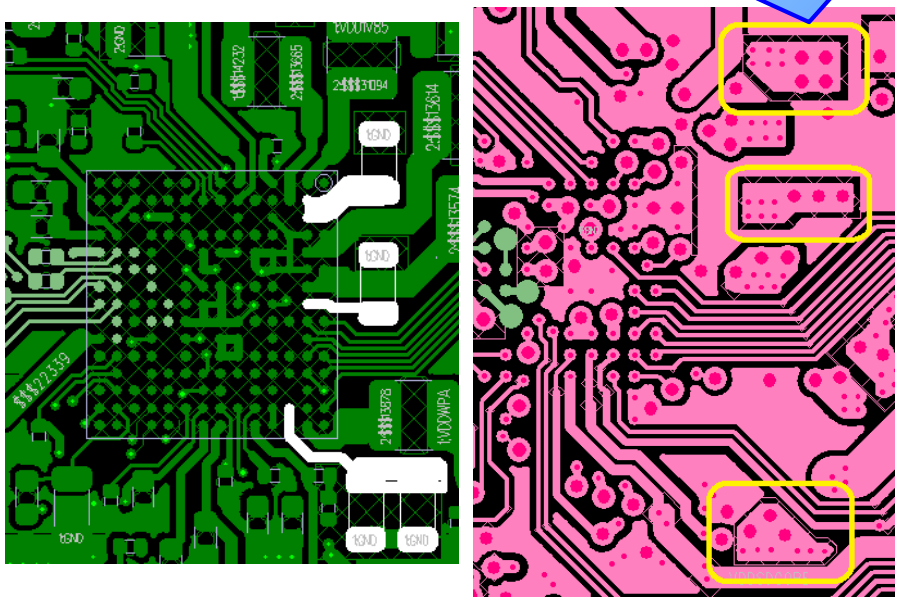

- VBATDRV pins are DCDC input. The capacitors must be placed separately to ensure that every group shall have a capacitor at least: 22μF for group 1, 10μF for group 2, 10μF for group3.
- The DCDC input capacitors' GND pads shall be isolated from all other GND planes with dedicated vias to main GND plane.

Power 4/23

Unisoc Confidential For longcheer Informal

VBAT (Continued)

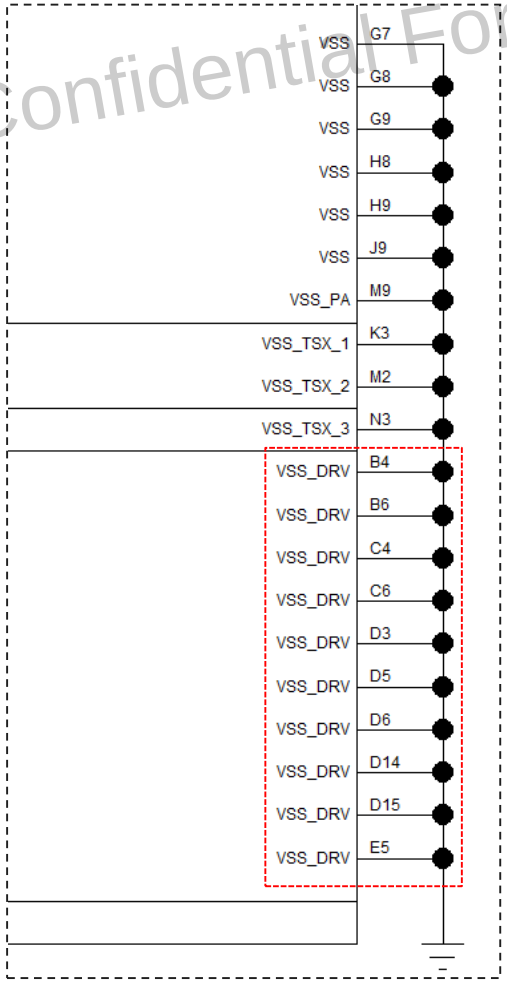

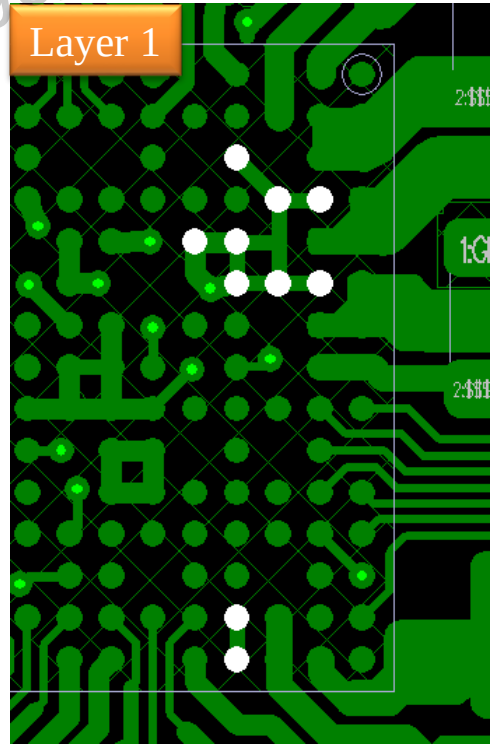

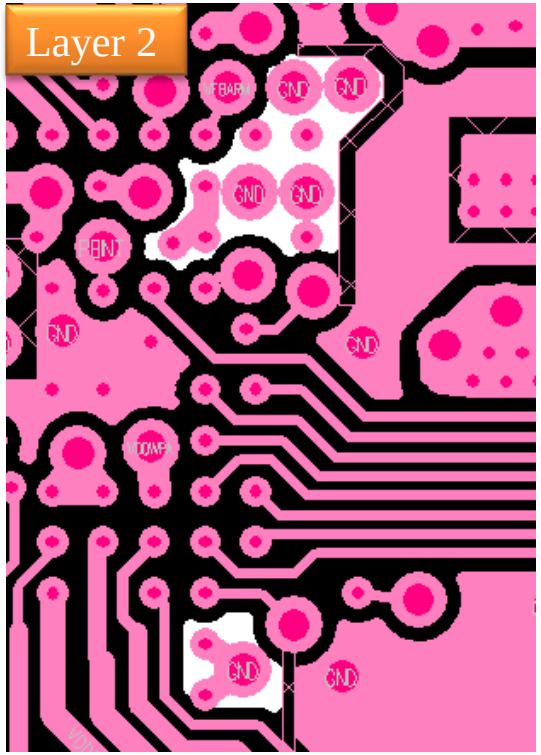

VSS_DRV pins shall be isolated from all other GND planes with the dedicated vias directly to main GND plane. The layout is shown on the layer 1 and layer 2 of the 8HDI-1.

Power 5/23

Unisoc Confidential For Longcheer Informal

DCDC

Power Name	Output Voltage (V)	Output Current (mA)	Default Voltage (V)	Default Status	Feedback Sense	Usage
DCDCCPU	0.4-1.4	4000mA	0.9/1.05	ON	Remote	ARM
DCDCCORE	0.4-1.4	4000mA	0.9/1.05	ON	Remote	CORE
DCDCGEN1V4	0.6-1.8	1500mA	1.4	ON	Local	LDO input (VDDMEM/VDDRF1V25/VDDCAMD)
DCDCGEN1V8	1.6-2.1	1000mA	1.85	ON	Local	LDO input (VDDCON/AVDD18/VDDRF18/VDDCAMIO)
DCDCWPA	0.4-3.6	1000mA		OFF	Local	RF PA

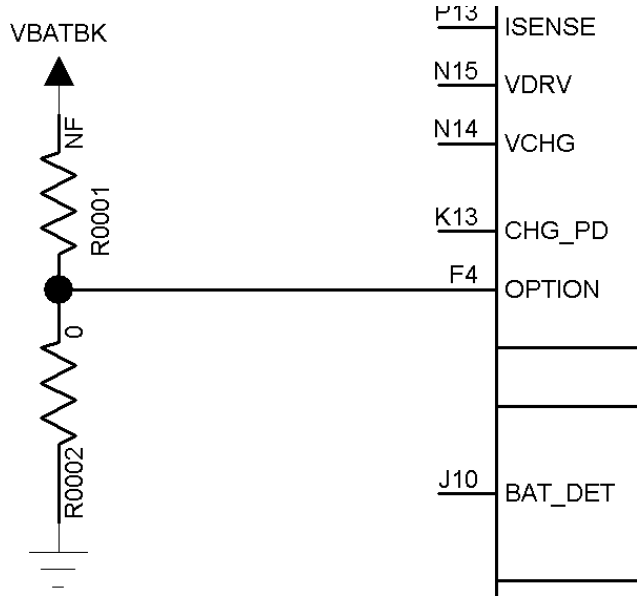

The OPTION pin controls the DCDCCPU and DCDCCORE default voltage. If OPTION pin need high voltage, it should be pulled to VBATBK with 100kΩ Resistor. If OPTION pin need low voltage, it should be connected to GND with 0Ω Resistor.

Default Power	VDDCORE	VDDARM
Option=1	0.9V	0.9V
Option=0	1.05V	1.05V

Follow PDN recommendation and pass PI simulation in all DCDC layout design.

Power 6/23

Unisoc Confidential For longcheer Internal

DCDC (Continued)

General Rules of DCDC Design

- Components shall be placed near relevant power pins and LX trace length shall be less than 0.5mm.
- Layer 2 under inductor shall be GND plane.
- Avoid paralleled routing of LX and RF powers.
- Capacitors' GND pads shall be isolated from all other GND planes with dedicated vias directly to the main GND plane.

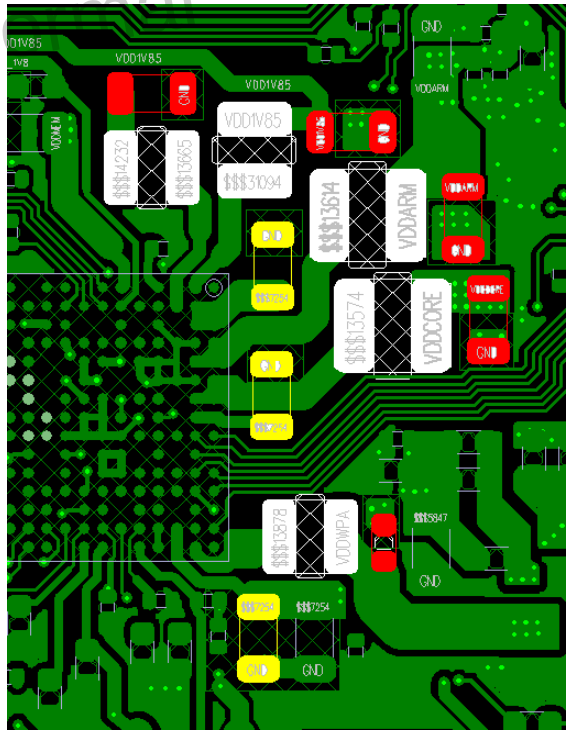

DCDC placement

- Input capacitor
- Inductor
- Output capacitor

Example of output capacitor GND isolation

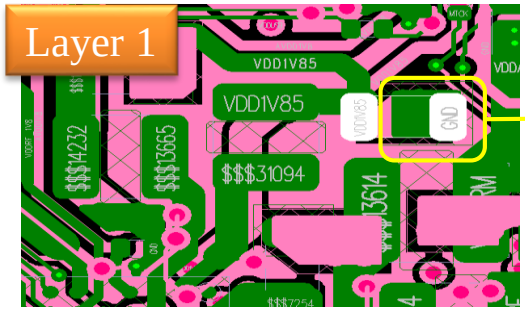

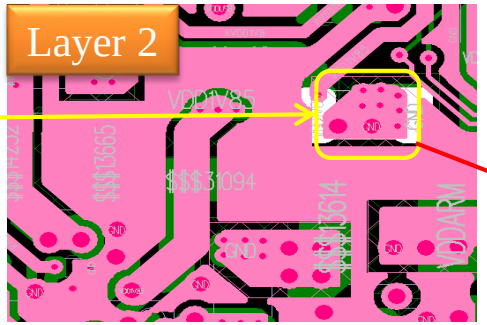

Directly connected to main GND plane through vias

Power 7/23

Unisoc Confidential For longcheer Informal

DCDC (Continued)

On SC2721G Side

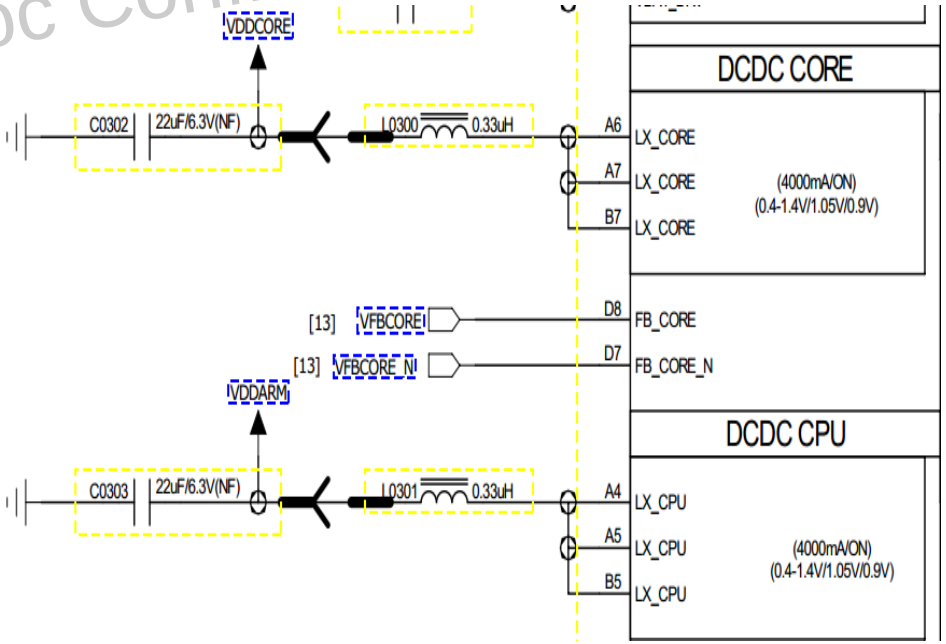

Option 1: sensed from VFB pins of baseband

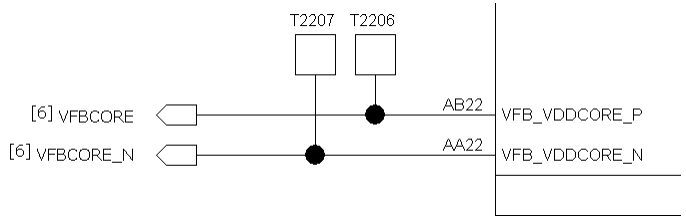

Option 2: sensed from VDDCORE load

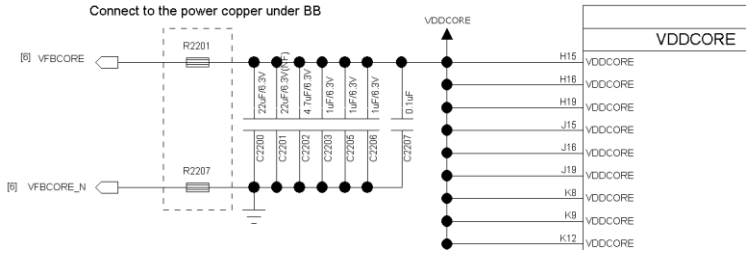

Follow the platform design guide shown as below.

- the remote sense option selecting
- Local capacitance

Power 8/23

UNISOC

DCDC (Continued)

Unisoc Confidential For longcheer Informal

General Rules of Feedback Layout

- VFB/VFB_N shall be routed as differential pair and shielded by GND.
- For sense from VDDCORE load, VFB/VFB_N should be connected to the load as close as possible.

Example of VFB/VFB_N routing

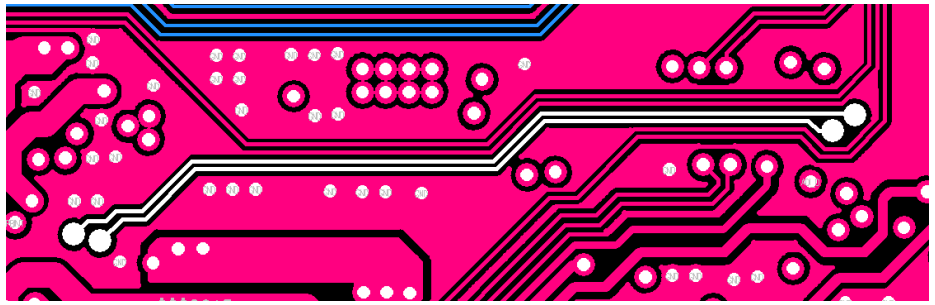

Example of sensing from VDDCORE pins of baseband

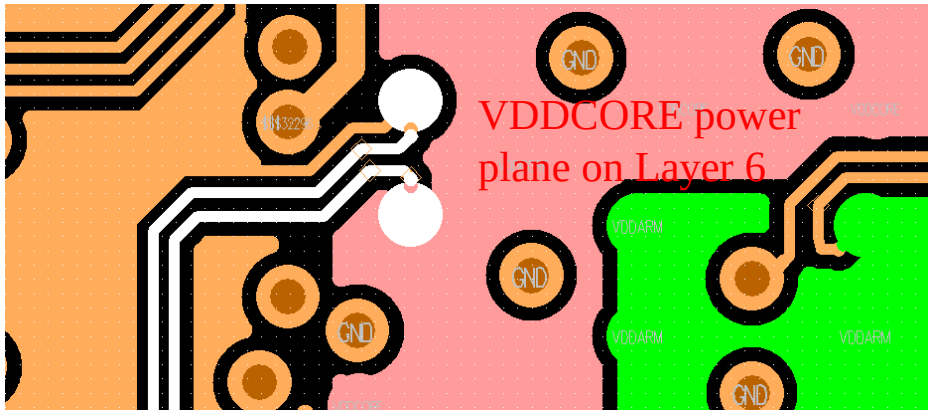

Power 9/23

DCDC (Continued)

Unisoc Confidential For longcheer Informal

General Rules of Feedback Layout

- Trace width shall be enough for relevant current path.
- All DCDC inductors mostly are for the max current, and you can select other inductors according to the factual application.

VFB Net Name	Trace Width	Usage
VDCDC_GEN1V4	≧0.8mm	LDO input (VDDMEM/VDDRF1V25/ VDDCAMD)
VDCDC_GEN1V85	≧0.5mm	LDO input (VDDCON/AVDD18/VDDRF18/ VDDCAMIO)
FB_WPA	≧0.4mm	DCDCWPA bypass mode

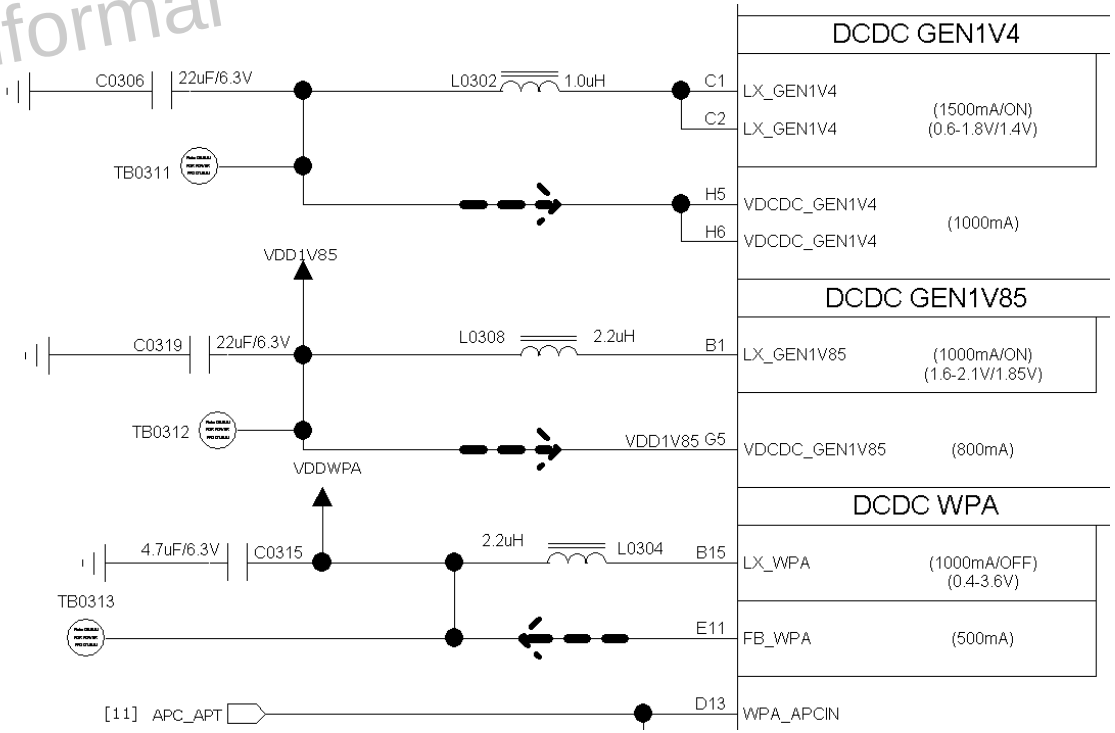

UNISOC

LDO

List of LDOs, please follow the trace width recommendation, PDN recommendation and pass PI simulation.

Unisoc Confidential For longcheer Informal

Power From	Power Name	Output Voltage (V)	Output Current (mA)	Trace Width	Default Voltage (V)	Default Status	Usage
VBAT	VDDCAMA	1.8-3.3	150	≧0.2mm		OFF	Camera
	VDDCAMMOT	1.8-3.3	100	≧0.2mm		OFF	Camera
	VDDSIM0	1.8-3.3	50	≧0.1mm		OFF	SIM Card
	VDDSIM1	1.8-3.3	50	≧0.1mm		OFF	SIM Card
	VDDSIM2	1.8-3.3	200	≧0.2mm		OFF	SIM Card/RF
	VDD28	1.8-3.3	200	≧0.2mm	2.8	ON	IO
	VDDEMMCCORE	1.8-3.3	400	≧0.4mm	3.0	ON	eMMC
	VDDSD	1.8-3.3	400	≧0.4mm	3.0	ON	SD Card
	VDDSDIO	1.8-3.3	100	≧0.2mm	3.0	ON	SD Card
	VBATBK	2.6-3.2	2	≧0.1mm	3.0	ON	Backup battery
	VDDRTC	1.75-1.9	2	≧0.1mm	1.75	ON	RTC
	VDDVIB	1.8-3.3	100	≧0.2mm		OFF	Vibrator
	VDDKPLED	1.8-3.3	50	≧0.05mm		OFF	KPLED
	VDDWIFIPA	1.8-3.3	400	≧0.5mm		OFF	Wi-Fi
	VDDDCXO	1.8-3.3	10	≧0.1mm	1.8	ON	DCXO
	VDDUSB33	1.8-3.3	60	≧0.1mm	3.3	ON	USB
DCDCGEN1V85	VDD_CON	1.1-1.6	400	≧0.4mm		OFF	WCN
	VDDCAMIO	1.1-1.9	200	≧0.2mm		OFF	Camera
	AVDD18	1.1-1.9	200	≧0.2mm	1.8	ON	LVDS/CSI/DSI…
	VDDRF18	1.1-1.9	200	≧0.4mm	1.8	ON	RF
DCDCGEN1V4	VDDRF1V25	1.1-1.4	200	≧0.4mm		OFF	RF
	VDD_MEM	1.1-1.4	800	≧0.8mm	1.2	ON	Memory
	VDDCAMD	1.0-1.4	400	≧0.4mm		OFF	Camera

Power 11/23

LDO (Continued)

Unisoc Confidential For longcheer Informal

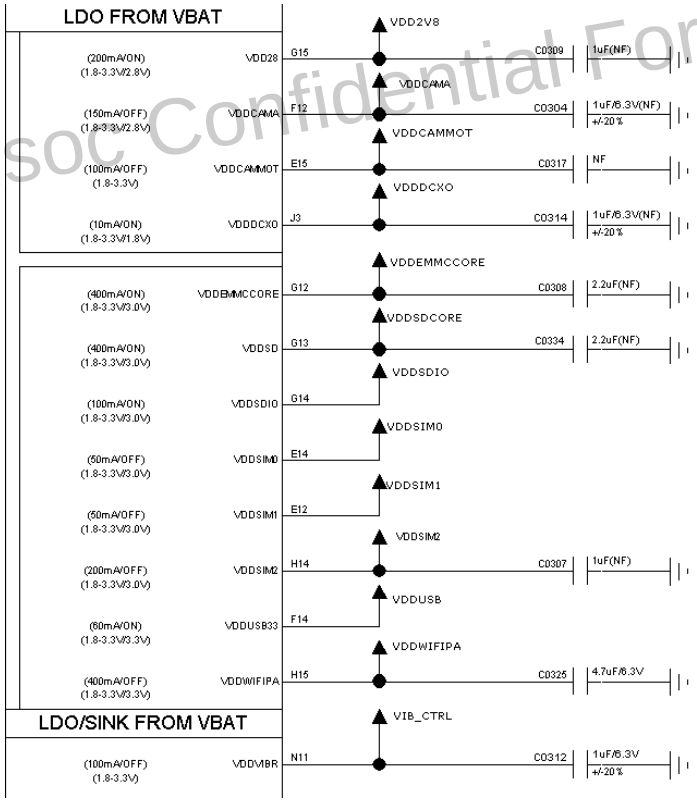

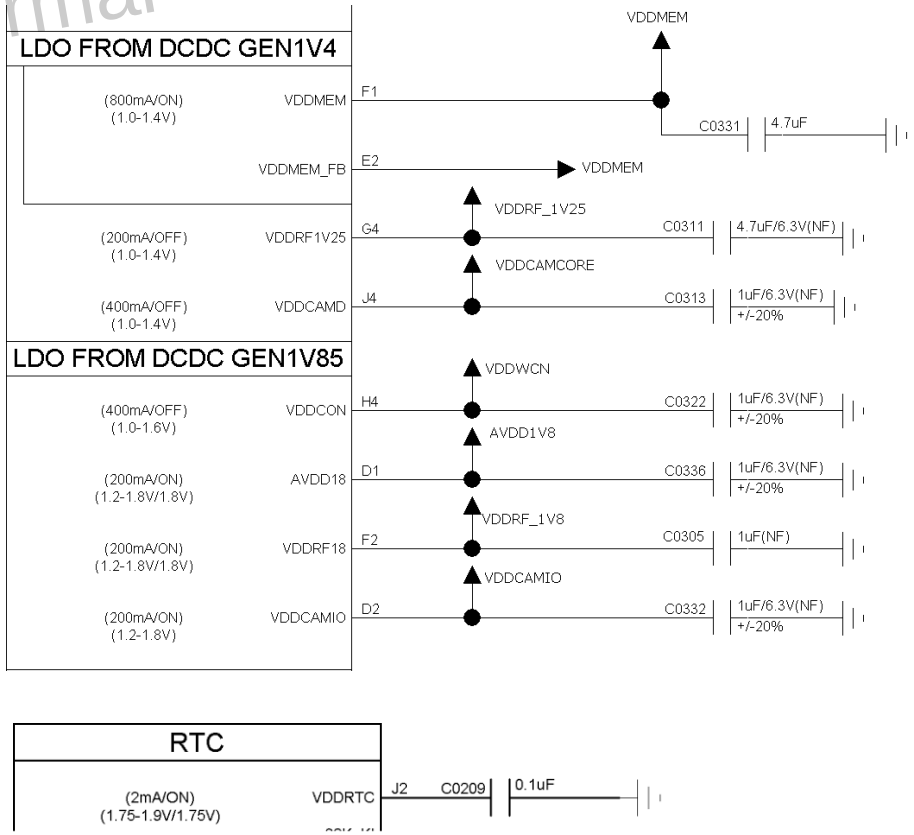

General Rules of Feedback Layout

- As shown above, some LDOs apply the remote capacitor, and the local capacitor can be NF.
- All LDOs' output capacitor shall be at least 1μF to prevent oscillation except VDDRTC that satisfies 0.1μF.
- All LDOs use local feedback except VDDMEM that should use remote sense.

Power 12/23

UNISOC

LDO (Continued)

Unisoc Confidential For long cheer Informal

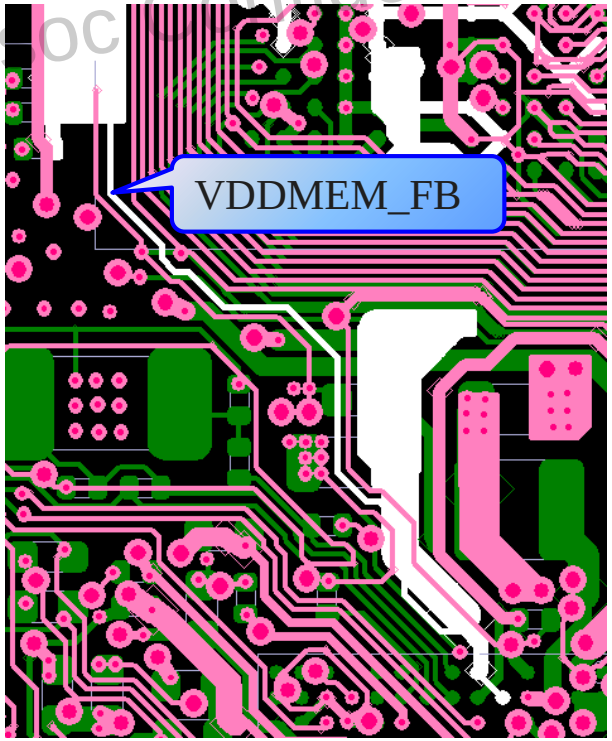

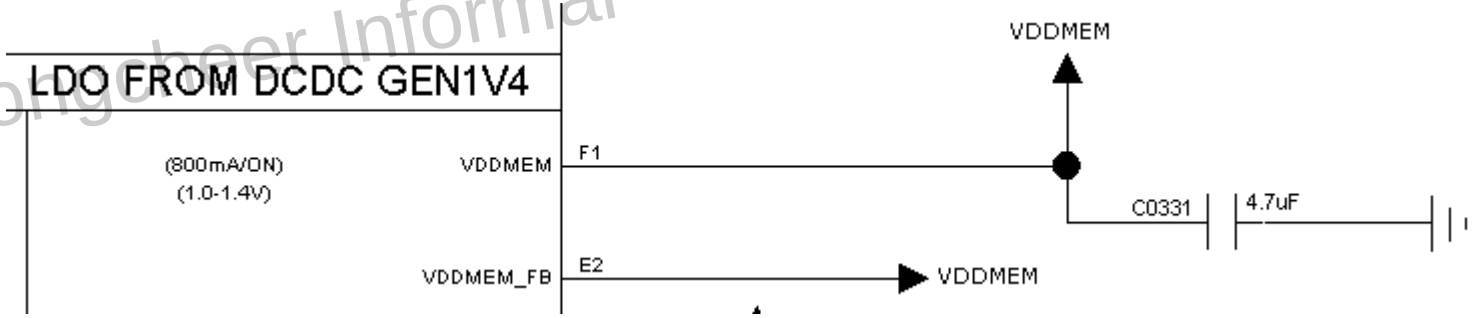

VDDMEM_FB from the Memory Side

General Rules of VDDMEM Layout

- A 4.7μF capacitor shall be placed close to pin-out of SC2721G.
- VDDMEM trace width shall be ≧0.8mm.
- VDDMEM_FB shall use Kelvin connection from the capacitor nearest the memory.

Power 13/23

VDDKPLED

Unisoc Confidential For longcheer Informal

VDDKPLED has two modes of lighting: LDO mode and current mode.

- The first recommendation is to use **LDO mode**.

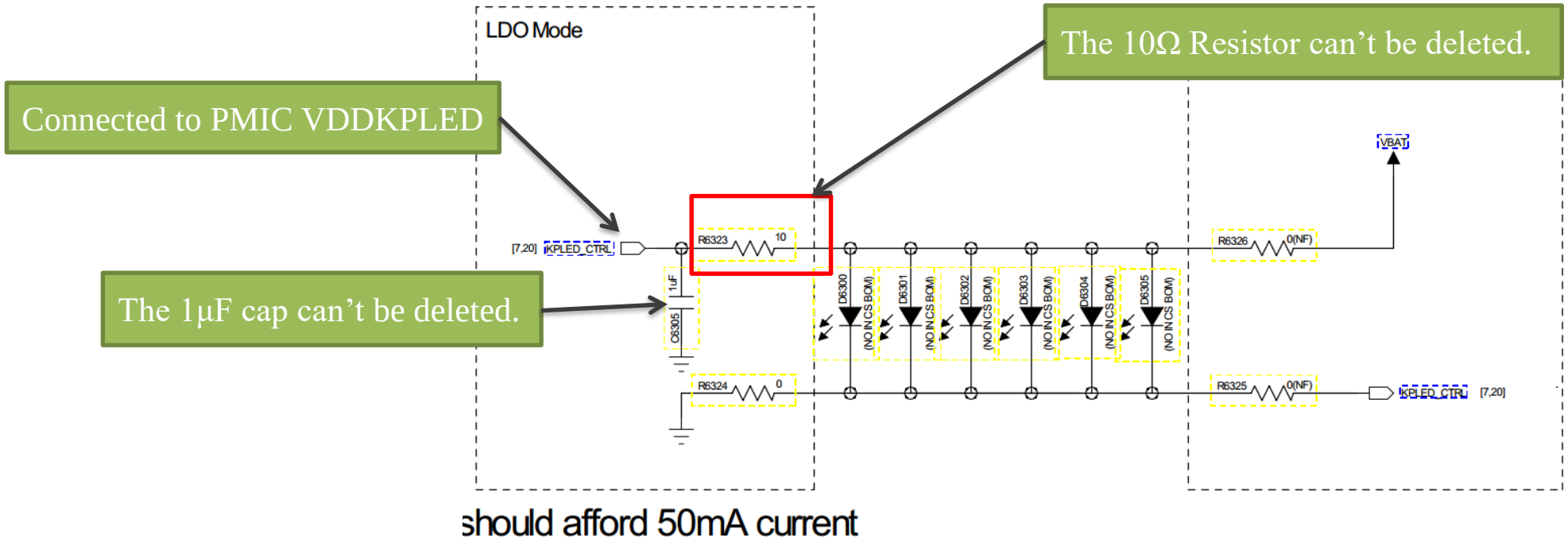

VDDKPLED Voltage: 1.8V-3.3V; 10mV/step; default=3.3V

Power 14/23

VDDKPLED (Continued)

Unisoc Confidential For longcheer Informal

- When there is a demand of more than 50mA current and the risk that the LED has **a slight electroluminescence** is acceptable, hardware Schematic design of the **current mode** should be compatible.

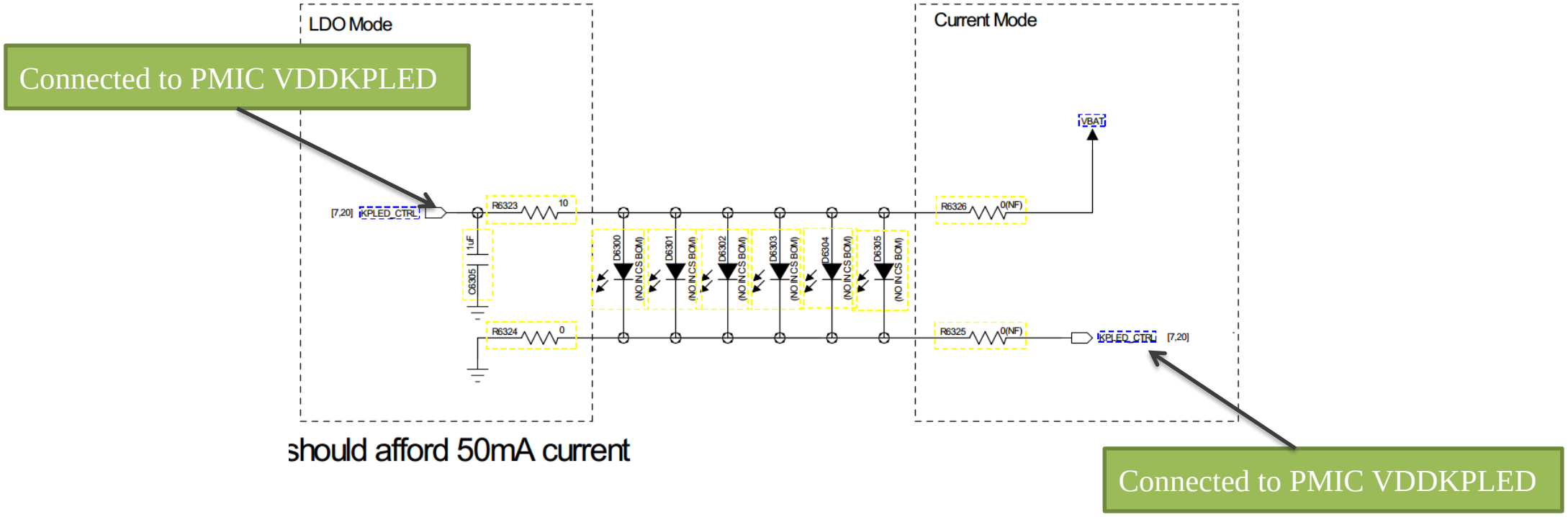

Power 15/23

Unisoc Confidential For longcheer Informal

RGB_IB0/1/2 Sink Mode for RGB LED and BLTC

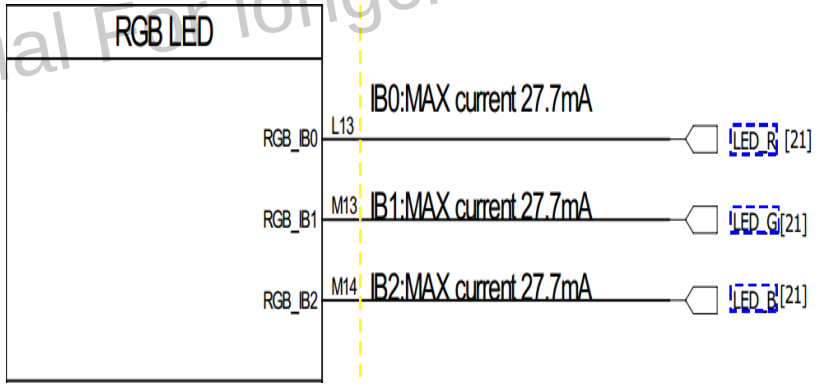

Used separately

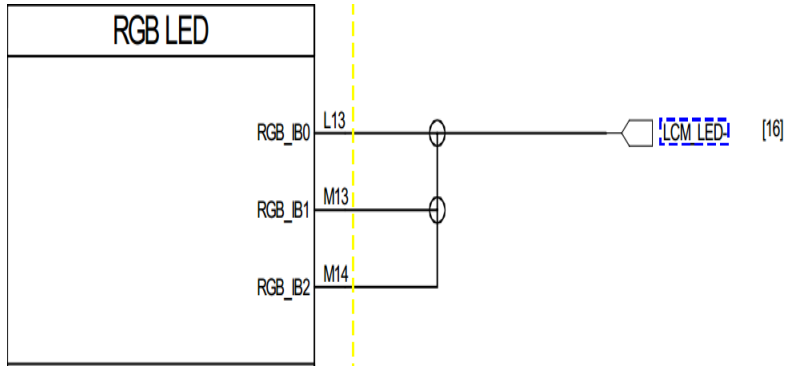

Used together

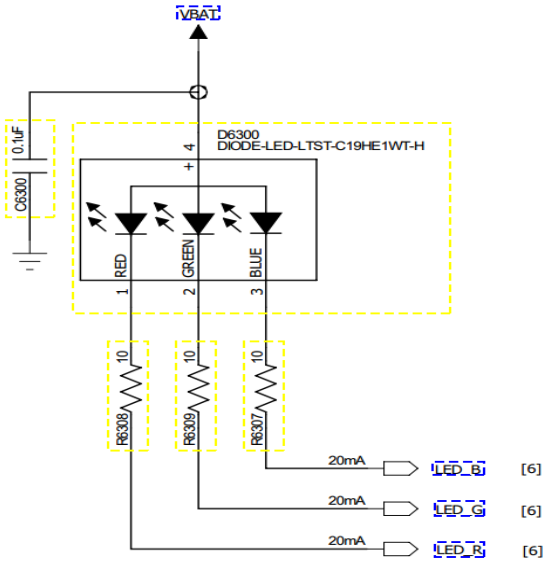

RGB_IB0/1/2 Sink Mode

- RGB_IB0/1/2 can be used separately.
- RGB_IB0/1/2 can also be used together.
- RGB_IB0/1/2 support BLTC (Breathing Light Controller).

Power 16/23

Unisoc Confidential For longcheer Informal

Linear Charge

R6100, R6109 and C6100 are mandatory for VCHG surge protection.

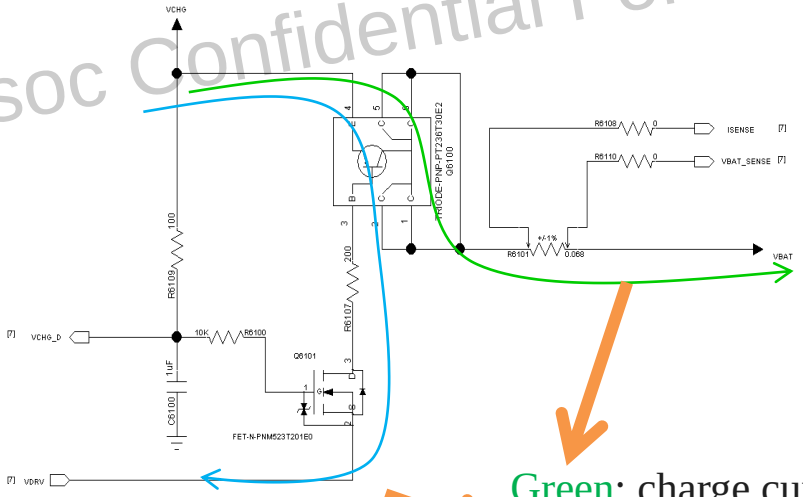

Green: charge current path
Blue: current control path

Pin Name	Description
VBAT_SENSE	Battery voltage measurement (input for both AUXADC and FGU modules), one of two charge current feedback pins
ISENSE	One of two charge current feedback pins
VDRV	Linear charge control, maximum 25mA current sink
VCHG	VCHG presence detection and voltage measurement
CHG_PD	For external charge IC enable/disable control (low active), not used for linear charge

If linear charge is not used (i.e. external charge IC or no charge function), ISENSE and VDRV pins could be floating, while VBATSENSE and VCHG pins should be supplied by system power and USB power separately, otherwise the USB download function will be impacted .

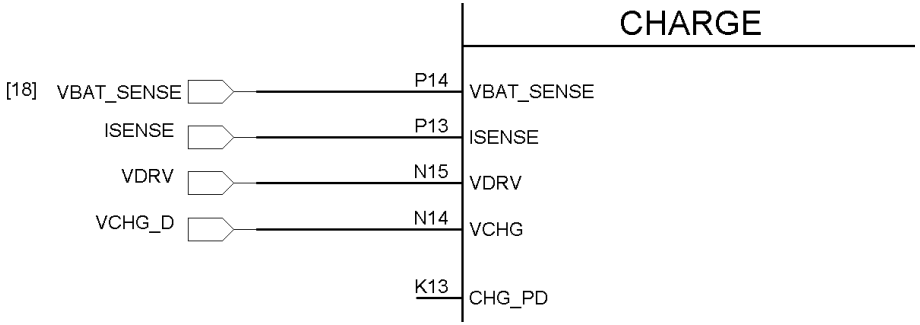

Normally 68mΩ is used for charge current sampling. It could be changed in some special cases, meanwhile the actual charge current would be changed respectively.

$$I_{ACTUAL} = I_{SW} * 68 / R_{ACTUAL}$$

R_{ACTUAL}	68mΩ	33mΩ	100mΩ
SW Setting (I_{SW})	500mA	500mA	500mA
Actual Current (I_{ACTUAL})	500mA	1030mA	340mA

UNISOC

Linear Charge (Continued)

Unisoc Confidential For longcheer Informal

Charge Current vs VBAT

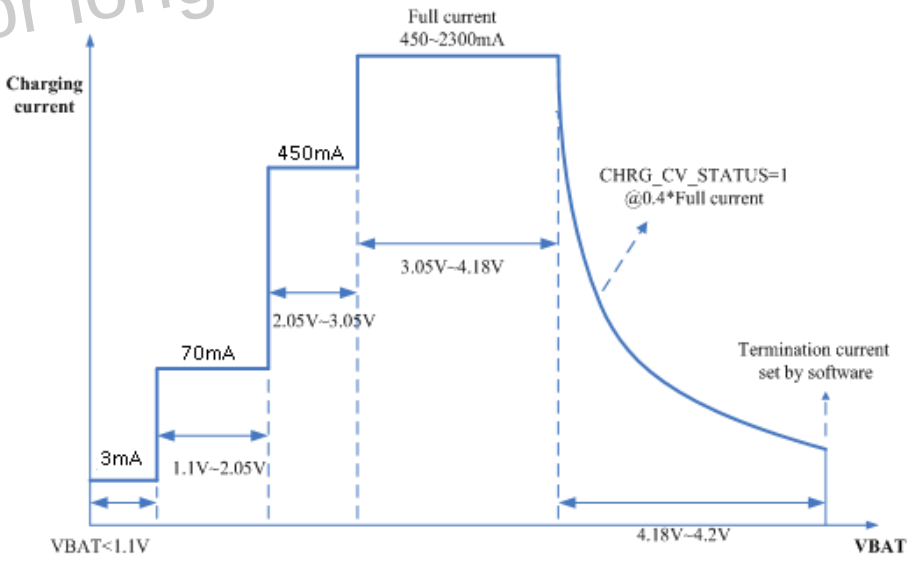

The end-of-charge voltage is programmable by software from 4.2V to 4.6V with 7.5mV per step.

Charge Control		HW	HW	HW	SW (CC)	SW (CV)	SW (Recharge)
VBAT		<1.1V	1.1V~2.05V	2.05V~3.05V	3.05V~4.18V	4.18V~4.2V	4.15V
I_{Charge}	Adatper	3mA	70mA	450mA	450mA~2300mA		
	USB	3mA	70mA	450mA	450mA~500mA		

Power 18/23

Unisoc Confidential For longcheer Informal

Linear Charge (Continued)

General Rules of Linear Charge

- For accurate charge current sensing, ISENSE/VBATSENSE should be routed as differential pair.
- Apply specific package for sampling resistor (0.068Ω/0.125W, ±1%).
- Charge current sampling resistor should be placed near the battery connector.
- Charge current path trace width should be ⩾1mm.

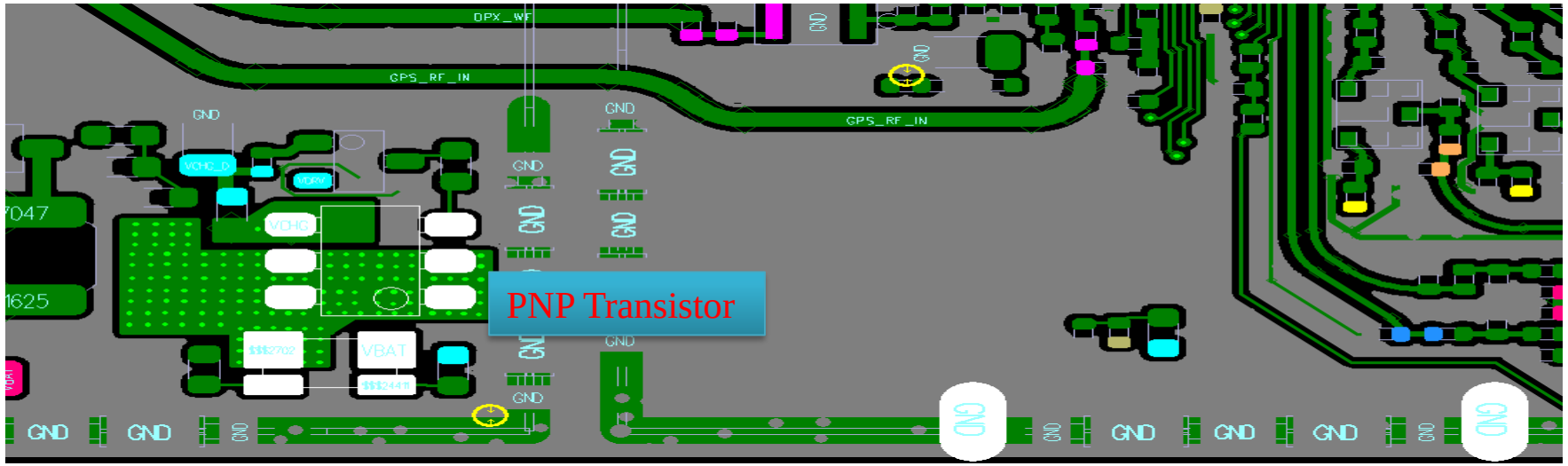

Sampling Resistor

Battery Connector

Power 19/23

Linear Charge (Continued)

Unisoc Confidential For longcheer Informal

Thermal Consideration for Linear Charge

Power dissipation on PNP transistor: P= U×I = (VCHG-VBAT) × Ichg

General Rules of Thermal Optimization

- Copper for PNP transistor should be as larger as possible, and 50mm^2 is recommended.
- For system thermal consideration, it is recommended to set charge current less than 700mA.
- Place a NTC temperature sensor near PNP transistor (<2mm) for thermal monitor and control.

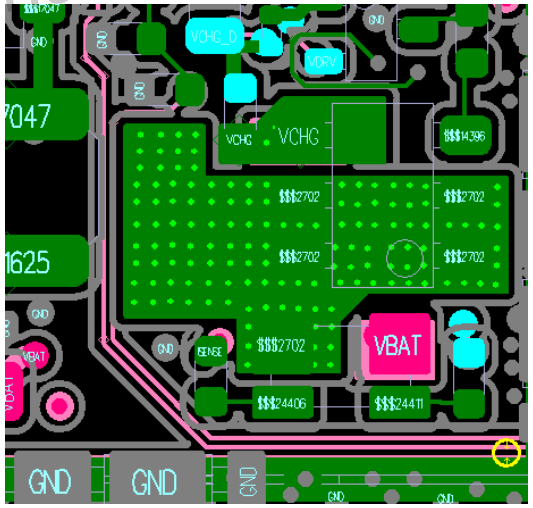

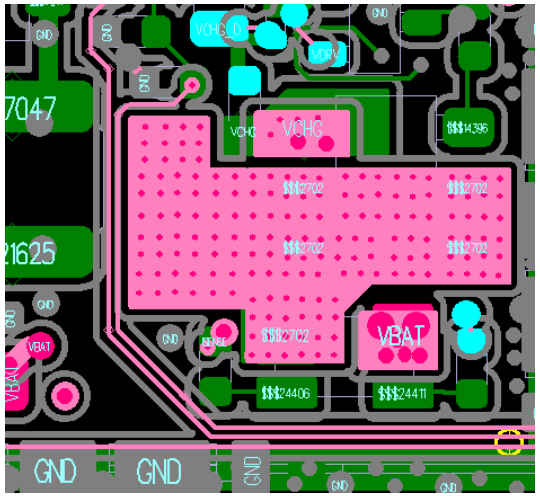

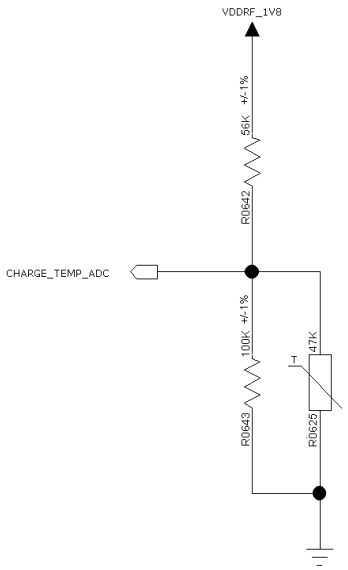

Power 20/23

UNISOC

Switch Charge

SC2721G itself does not support switch charge & OTG. You can get these functions with the help of external IC such as FAN54005.

Unisoc Confidential For longchen Informal

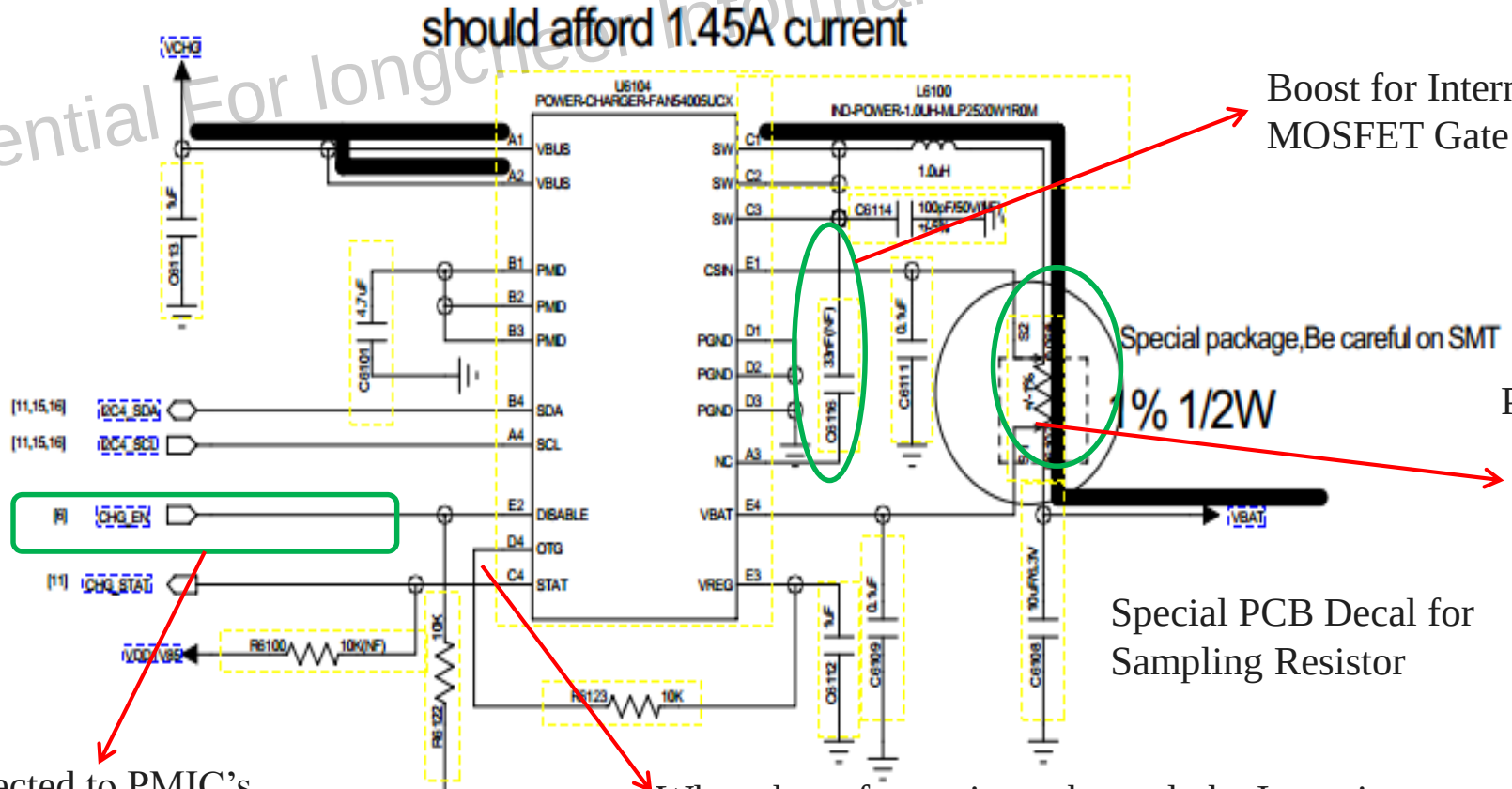

Boost for Internal MOSFET Gate Reserved

PCB Decal

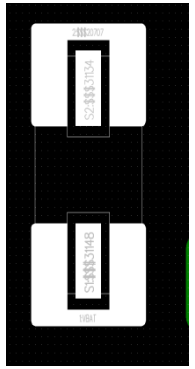

Special PCB Decal for Sampling Resistor

Connected to PMIC's CHG_PD pin, do not change.

When the software is not booted, the I_{INLIM} is relevant to the OTG Pin.

OTG=0	I_{INLIM}=100mA
OTG=1	I_{INLIM}=500mA

If there is no charge function, please make sure that VBATSENSE is connected to VBAT with series 0Ω resistor.

Power 21/23

Battery Presence Detection

Unisoc Confidential For longcheer Informal

- BAT_DET is a dedicated pin for battery presence detection and battery temperature sensing.
- The 47kΩ pull up resistor is suitable for 10kΩ NTC resistor in the battery.
- For other NTC types, the principle of pull-up resistor selection is that the voltage of BAT_DET pin should always be less than 1.2V for battery presence scenario.
- For no battery application or battery without NTC, BAT_DET pin shall be tied to GND directly.

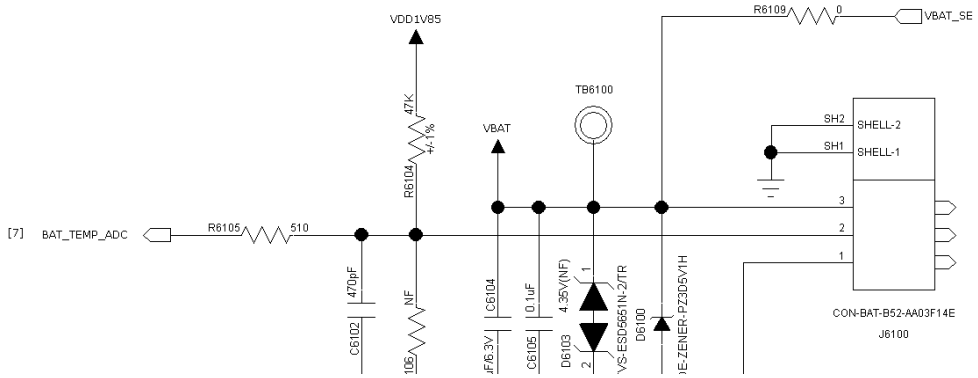

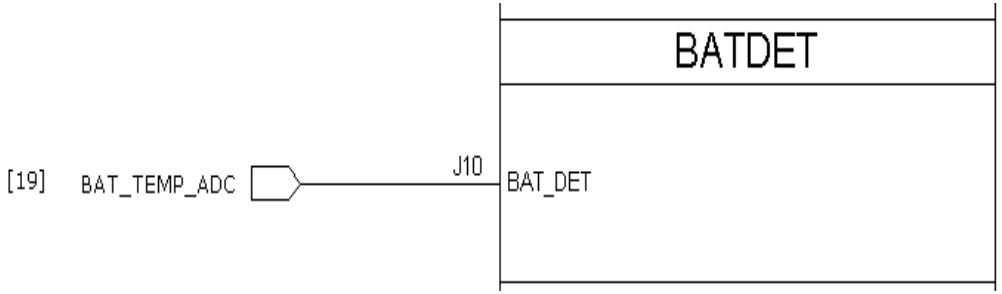

UNISOC

Fuel Gauge

Unisoc Confidential For longcheer Informal

PMIC integrates fuel gauge for precise current sensing and battery voltage measuring, which contains two high-precision ∑-Δ ADCs.

- One ADC is for current sensing, and the voltage precision is 7μV/LSB. When sampling resistor is 20mΩ, the current precision is 7μV/20mΩ=350μA.
- The other ADC is for battery voltage measuring, and the voltage precision is 1.5mV/LSB.

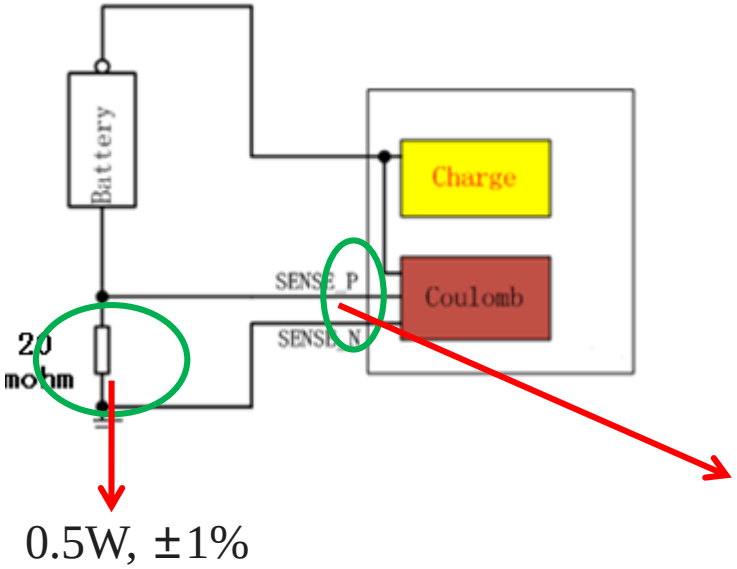

Follow differential rule in trace routing of SENSE_P and SENSE_N.

Power 23/23

Fuel Gauge (Continued)

Unisoc Confidential For longcheer Informal

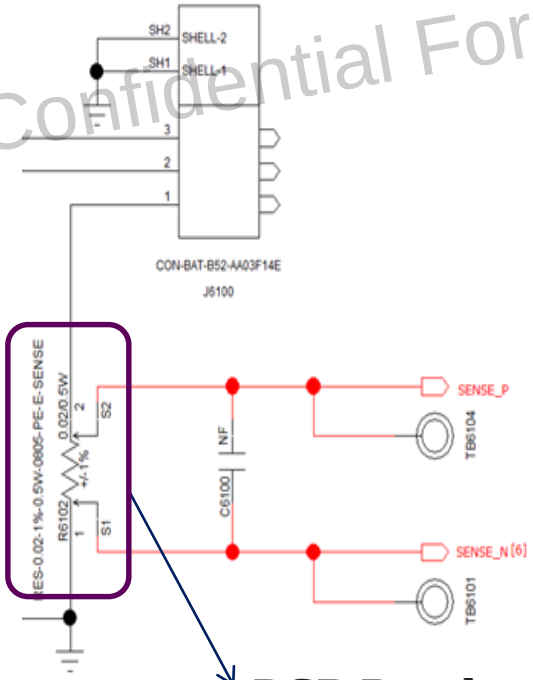

PCB Decal

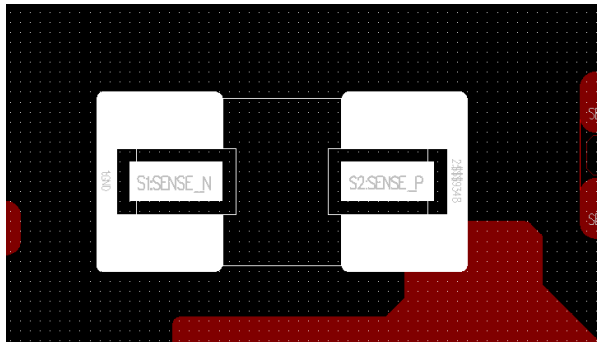

General Rules of Fuel Gauge

- Apply specific package for sampling resistor (0.02Ω/0.5W, +/-1%), refer to decal picture as below.
- Sampling resistor shall be placed to the battery connector as close as possible.
- SENSE_P/SENSE_N shall be routed as differential pair (0.075mm/0.075mm) and shielded by GND.

SENSE_P/SENSE_N Routed as Differential Pair

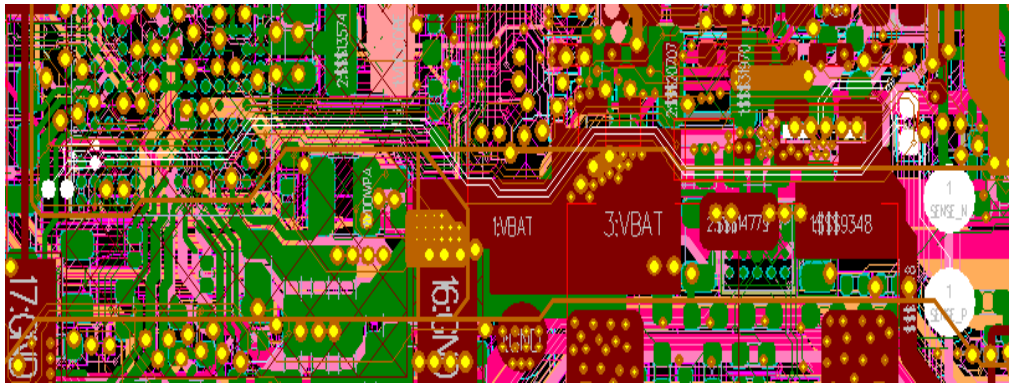

UNISOC

Unisoc Confidential For longcheer Informal

03

Audio

Audio 1/34

Audio Codec Block Diagram

Unisoc Confidential For longcheer Informal

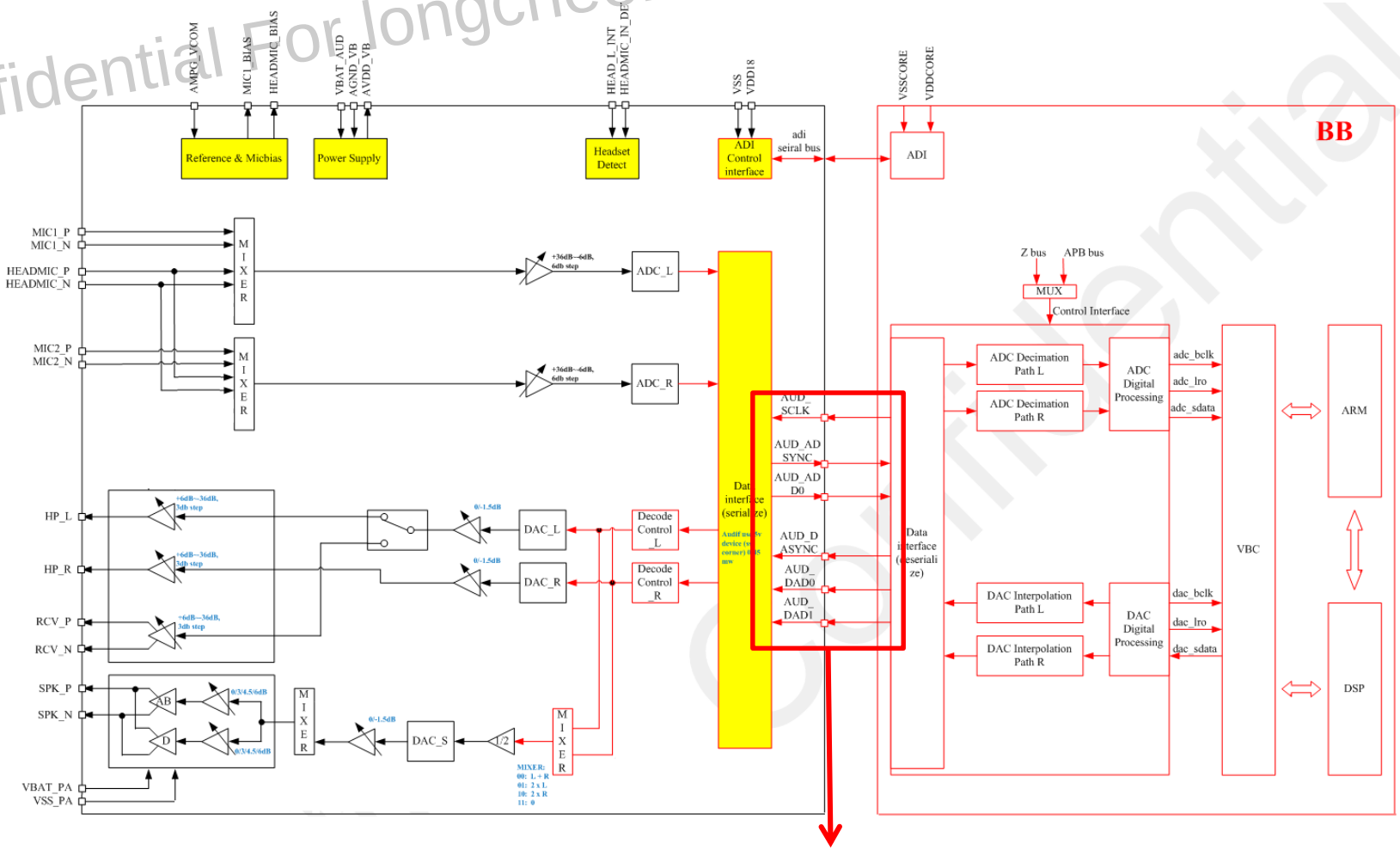

UNISOC Unique Audio Interface

Audio 2/34

Audio Interface

Unisoc Confidential For longcheer Informal

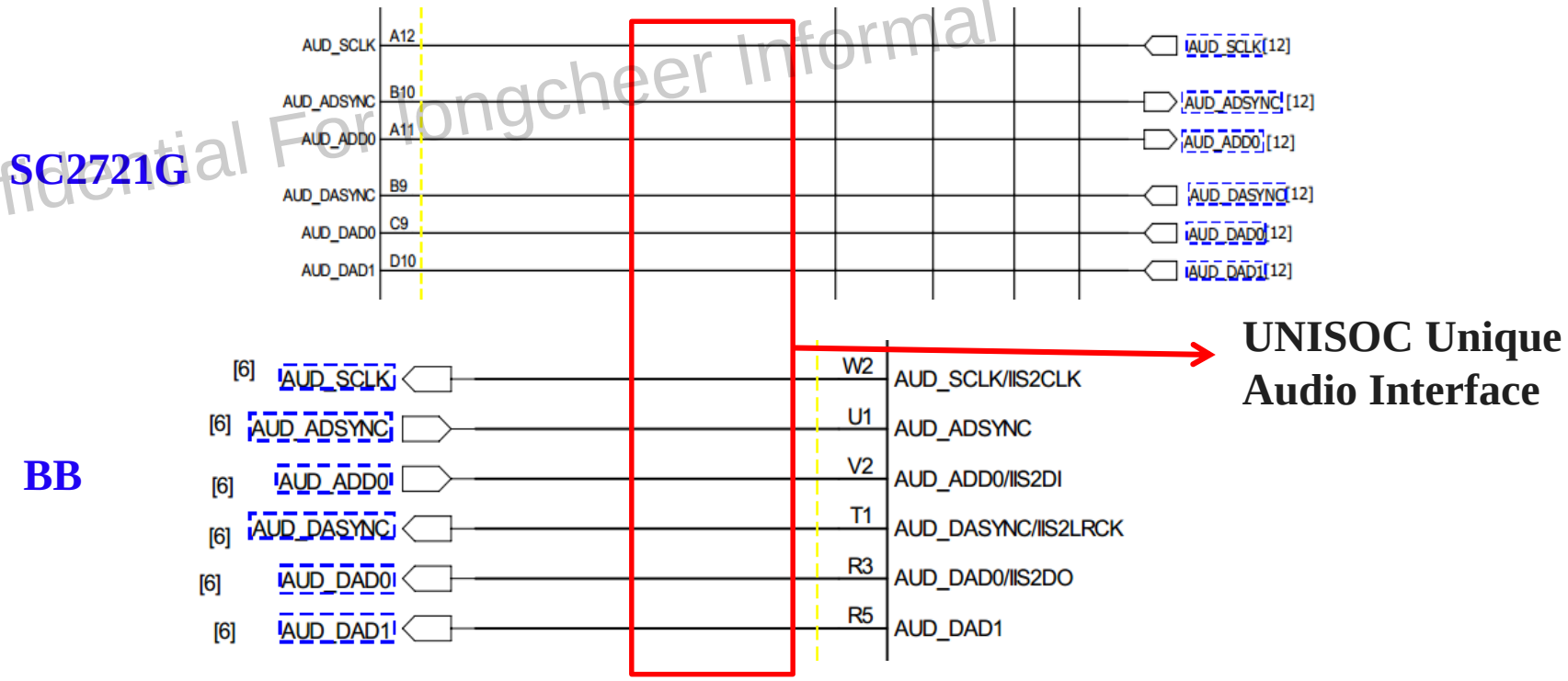

Ball No.	Ball Name	Description
A12	AUD_SCLK	Audio interface synchronize clock
B10	AUD_ADSYNC	Audio interface RX data synchronize signal
A11	AUD_ADD0	Audio interface RX data
B9	AUD_DASYNC	Audio interface TX data synchronize signal
C9	AUD_DAD0	Audio interface TX data bit 0
D10	AUD_DAD1	Audio interface TX data bit 1

Audio 3/34

MEMS Analog MIC

- Supported MIC: MEMS analog MIC and electret MIC
- Not Supported MIC: Digital MIC

Unisoc Confidential For longcheer Informal

C0204 is close to codec.

C0100 can improve MIC_BIAS PSRR. If MIC is placed far away from codec, MIC_BIAS may be interfered. R0101 can be replaced by bead, which could reduce the noise on MICBIAS.

1kΩ resistors are reserved for improving ESD protection performance. C3117, C3109, R3138 and R3139 together with the built-in input impedance set the HPF.

C0104 and C0105 are used to restrain RF disturbance. Connect them together then to main GND by a single via directly.

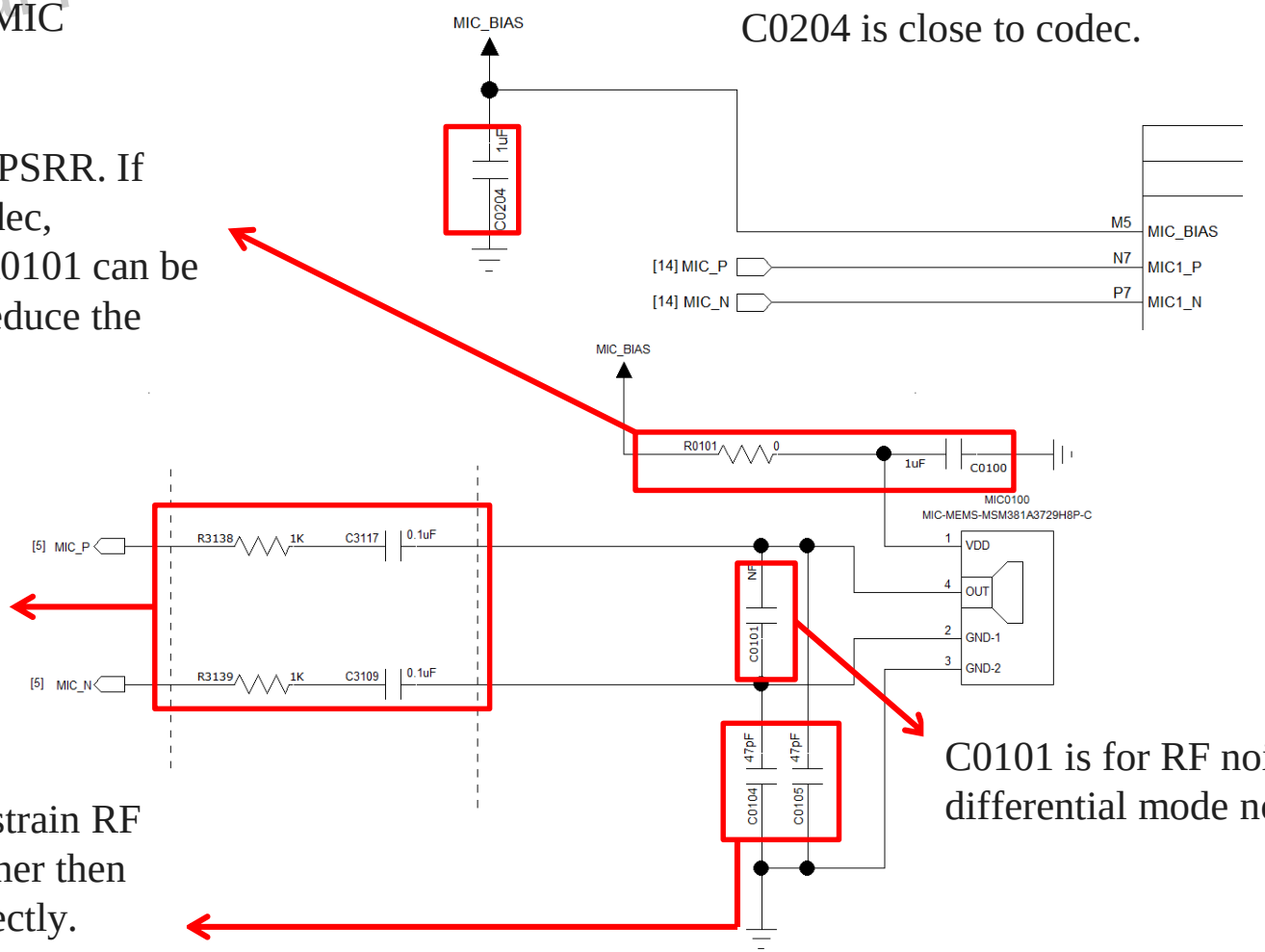

C0101 is for RF noise filtering and differential mode noise suppressing.

Audio 4/34

Electret MIC

Unisoc Confidential For longcheer informal

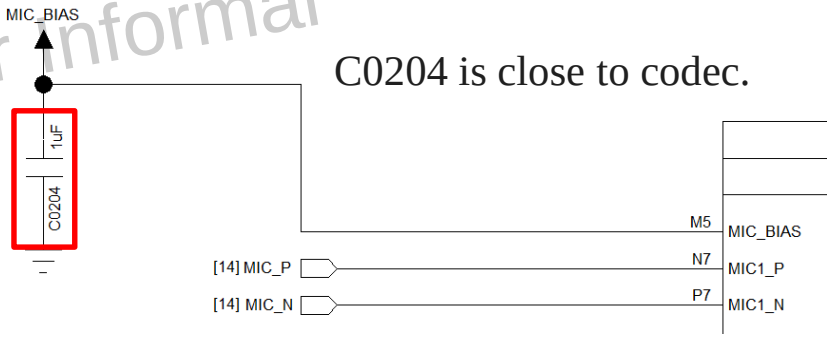

C0204 is close to codec.

R3100, R3106, R3103 and R3107 set the MICBIAS voltage, and they can reduce the noise on MICBIAS together with C3112.

1kΩ resistors are reserved for improving ESD protection. C3117, C3109, R3138 and R3139 together with the built-in input impedance set the HPF.

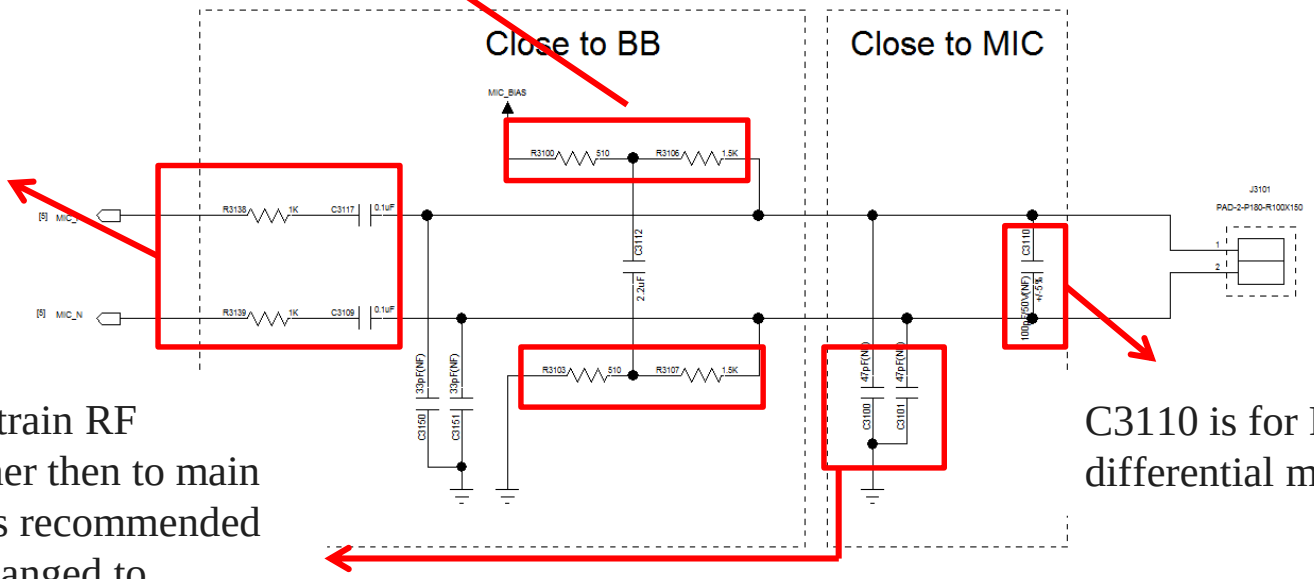

C3100 and C3101 are used to restrain RF disturbance. Connect them together then to main GND by a single via directly. It is recommended to use 0402 size, which can be changed to TVS/MLV for ESD issue.

C3110 is for RF noise filtering and differential mode noise suppressing.

Audio 5/34

MIC/AUXMIC/HEADMIC

Unisoc Confidential For longcheer Informal

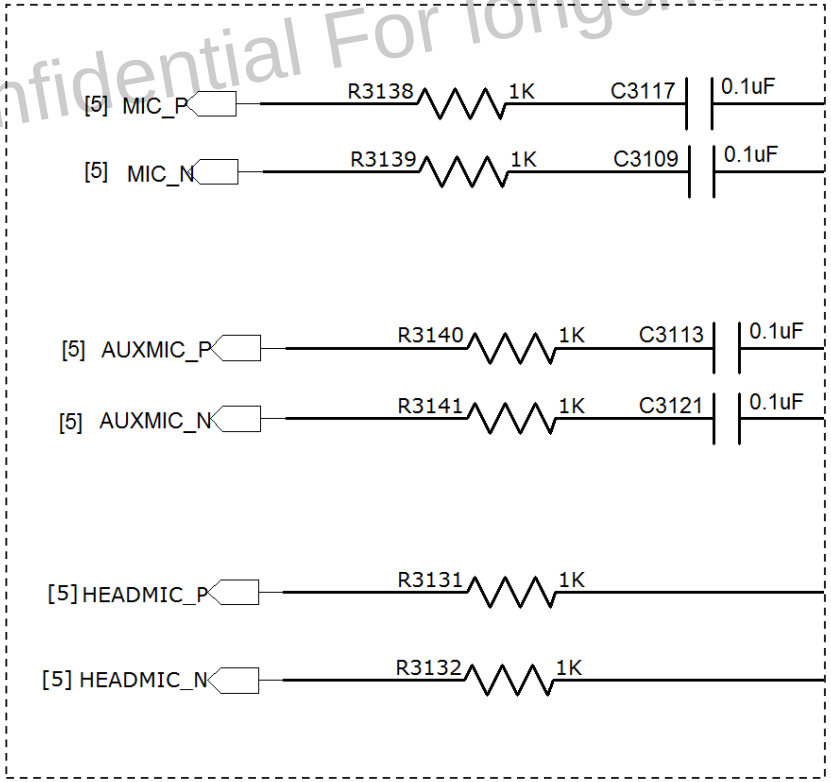

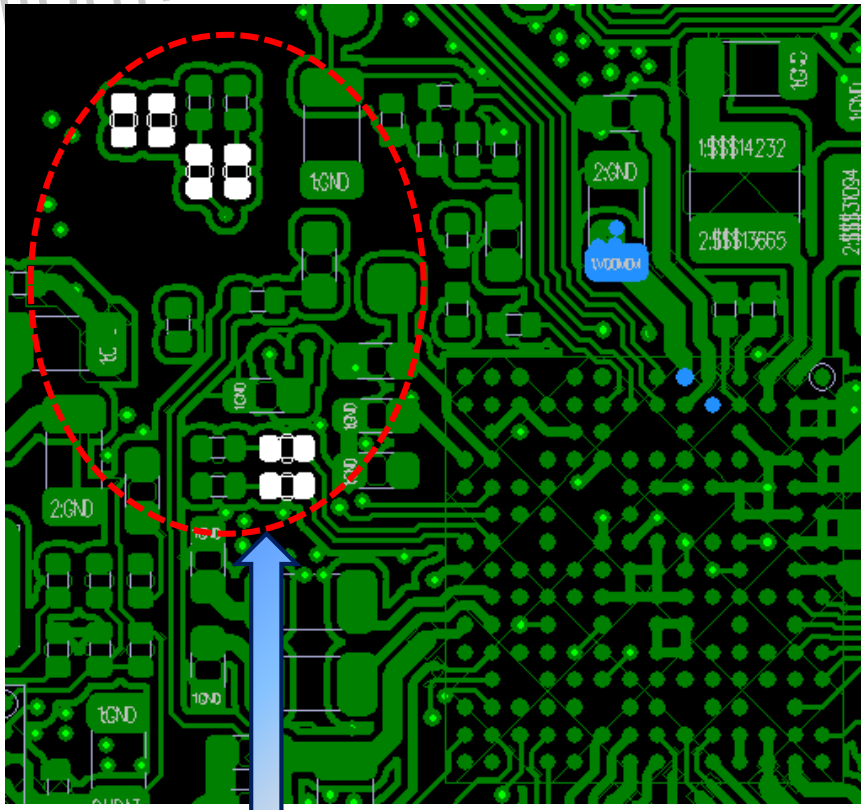

1kΩ resistors of MIC, AUXMIC and HEADMIC must be close to PMU.

Audio 6/34

AUX MIC

- When AUX MIC is not used, keep MIC2_P & MIC2_N floating.
- When AUX MIC is used:
  - Use the MIC2_P and MIC2_N as the port.
  - Use the same MIC_BIAS power as Main MIC.

Unisoc Confidential For Longscheer Informal

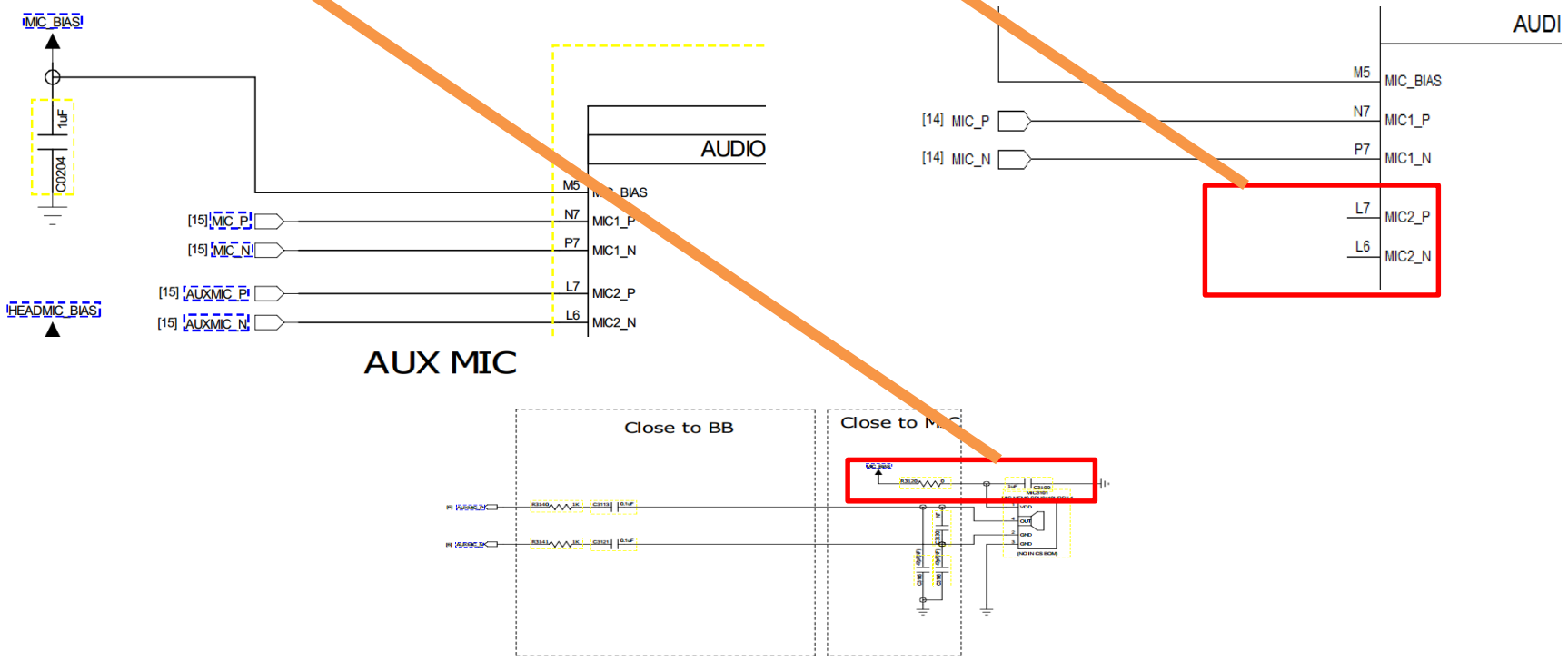

Audio 7/34

AUX MIC

Unisoc Confidential For longcheer Informal

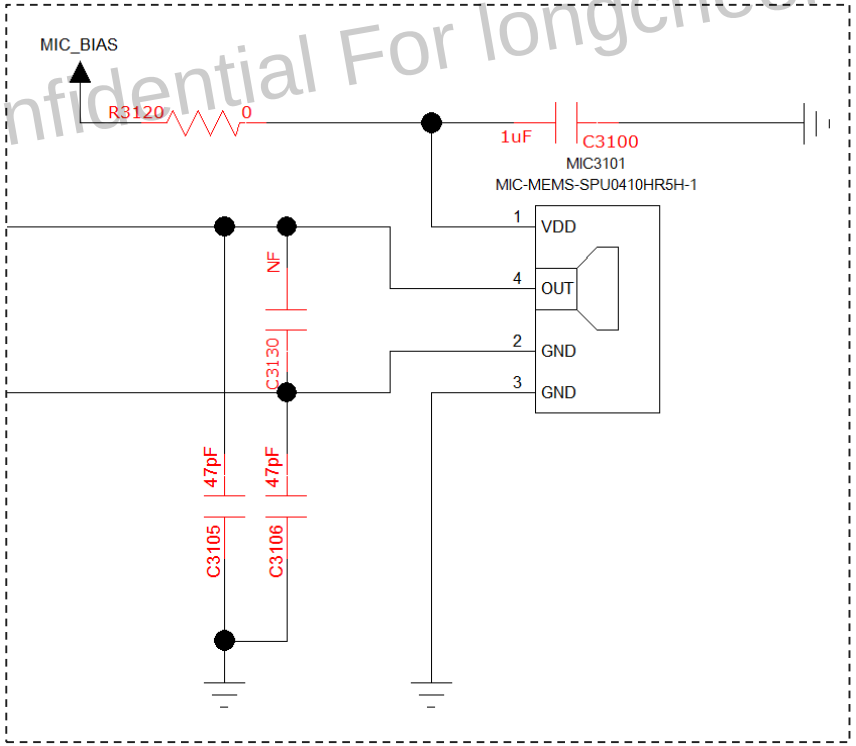

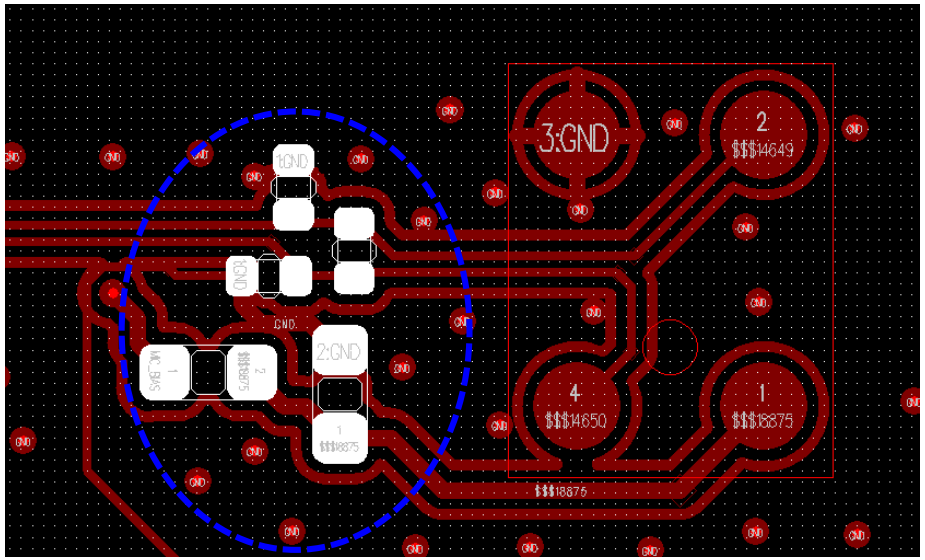

The peripheral components should be placed close to MIC.

Audio 8/34

Unisoc Confidential For Longcheer Informal

Audio MIC Signal Shielding

Best

Good

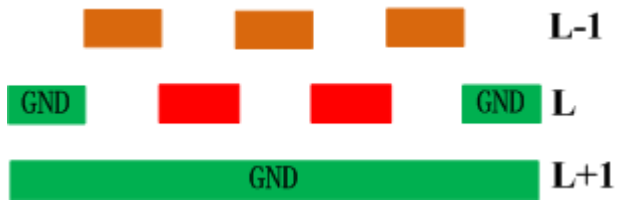

The MIC_P/MIC_N, AUXMIC_P/AUXMIC_N and HEADMIC_P/HEADMIC_N：

- Trace width should be ≥ 0.1mm.
- Should be routed as differential pairs.
- Should be shielded by GND.
- The other signals above or under the MIC signals should be routed orthogonally between adjacent layers.
- Under the MIC pads layer, do not route digital, analog and control signals, e.g. camera, I2C.

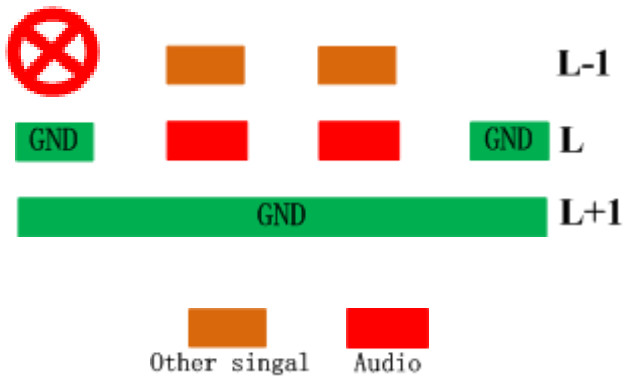

Audio 9/34

Unisoc Confidential For longcheer Informal

Audio MIC Interfered by Camera

Under the MIC pads layer, do not route digital, analog and control signals, e.g. camera, I2C.

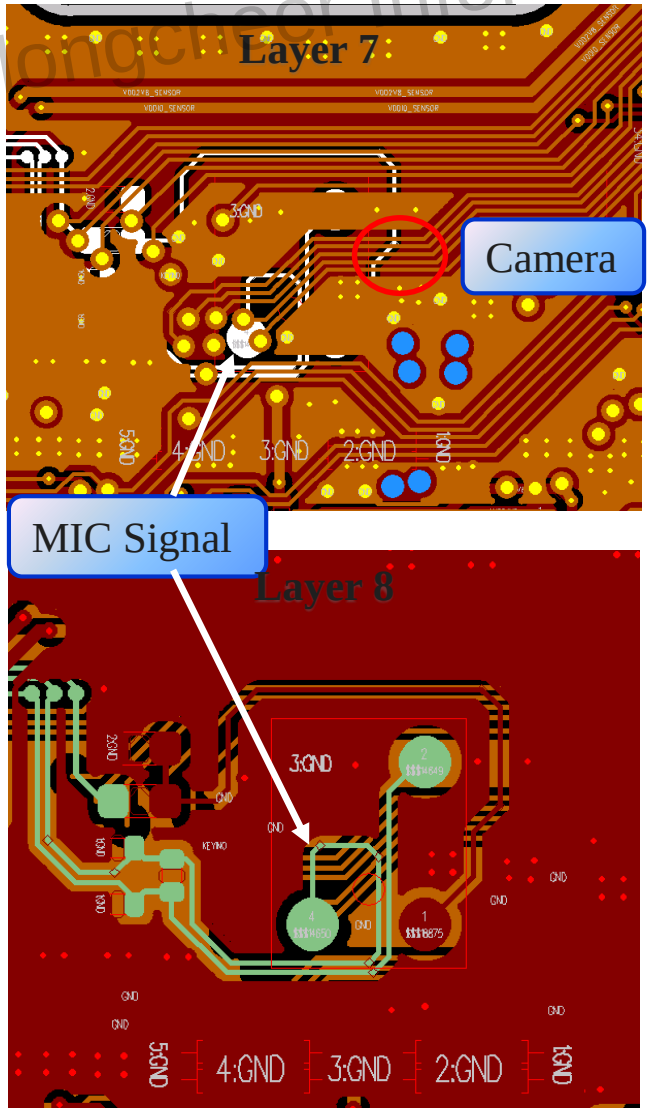

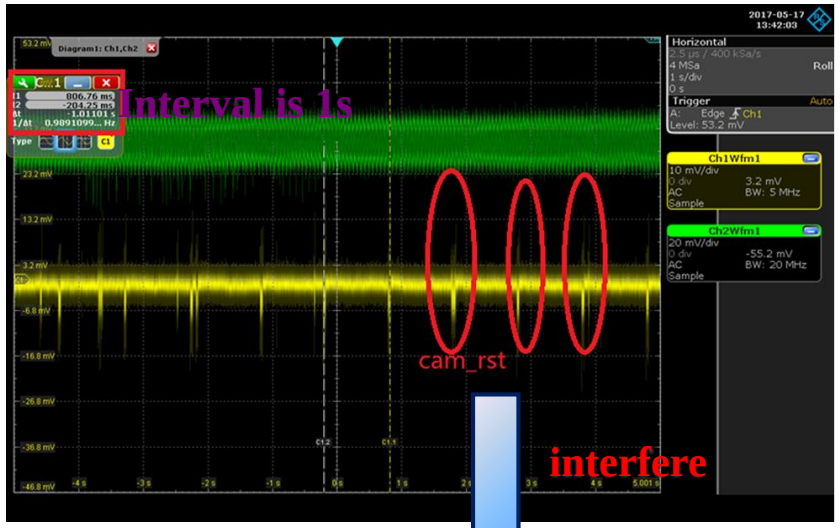

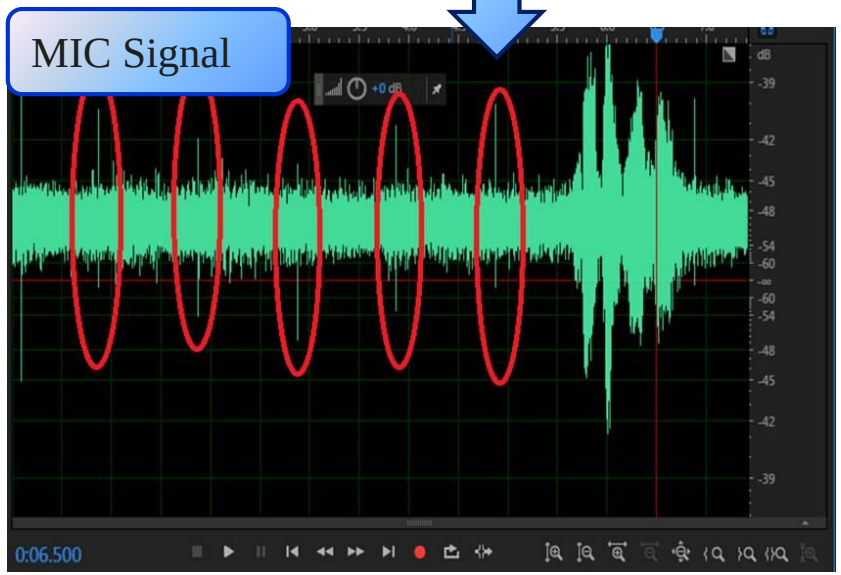

Audio 10/34

MIC_BIAS/HEADMIC_BIAS

Unisoc Confidential For longcheer Informal

- The MIC_BIAS/HEADMIC_BIAS trace width should be ≥0.1mm.
- The MIC_BIAS/HEADMIC_BIAS trace should be shielded by GND.
- The GND of decoupling capacitors C0204 and C0206 should be routed to main GND directly, and isolated with top or bottom GND.

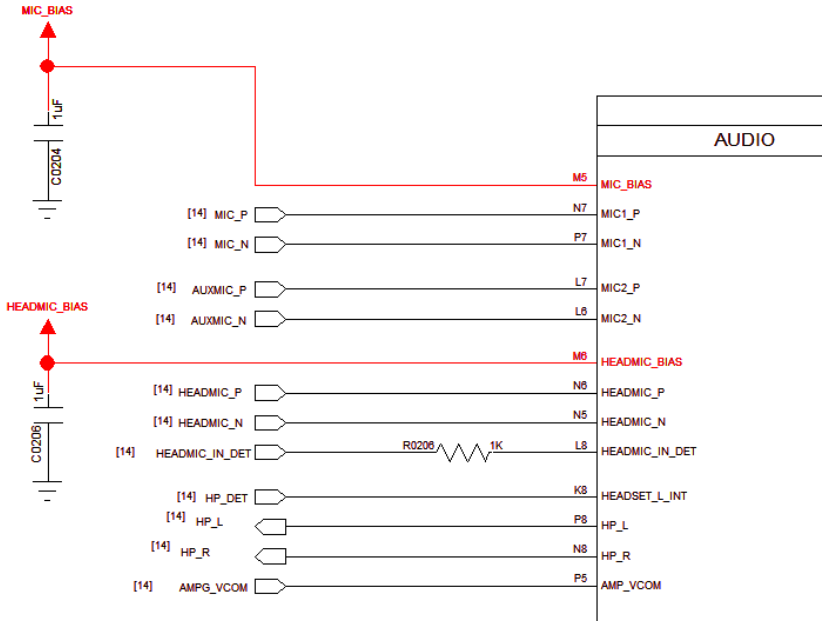

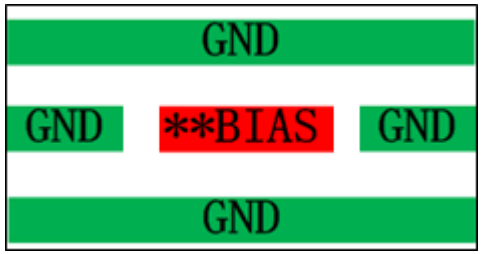

Audio 11/34

Unisoc Confidential For longcheer Informal

Dual MIC

Dual MIC design can suppress non-stationary noise and improve speech quality.

- SNR (main mic) & SNR (aux mic) need to be same, and the SNR difference between main mic and aux mic should be <3dB.
- The frequency response difference between main mic and aux mic should be <3dB.
- Sensitivity (main mic) & sensitivity (aux mic) need to be same, and the sensitivity difference between main mic and aux mic should be <1.5dB (most important).
- Aux mic should not be shielded by user.
- Isolate the aux mic and receiver.
- Main mic should be placed near the bottom of the phone set. See the picture on next page.
- Aux mic should be placed near the top & back of the phone set. See the picture on next page.
- The mic sensitivity difference between any two batches should be <3dB.

Audio 12/34

UNISOC

Dual MIC (Continued)

Unisoc Confidential For longcheer Informal

Dual MIC Placement

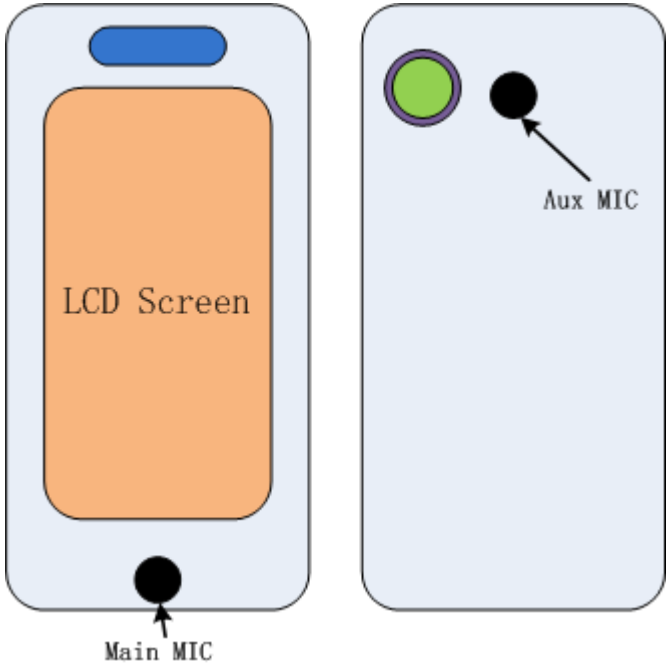

Audio 13/34

UNISOC

Headphone

Unisoc Confidential For longcheer Informal

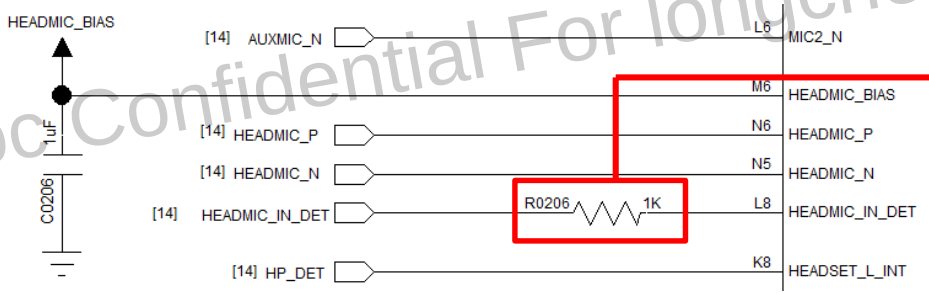

1kΩ resistor is reserved for improving ESD protection performance.

C3122, C3116, R3131 and R3132 together with the 20kΩ built-in input impedance set the HPF.

C3129 and C3118 are used to restrain RF disturbance. Connect them together then to main GND by a single via directly. It is recommended to use 0402 size, which can be changed to TVS/MLV for ESD issue.

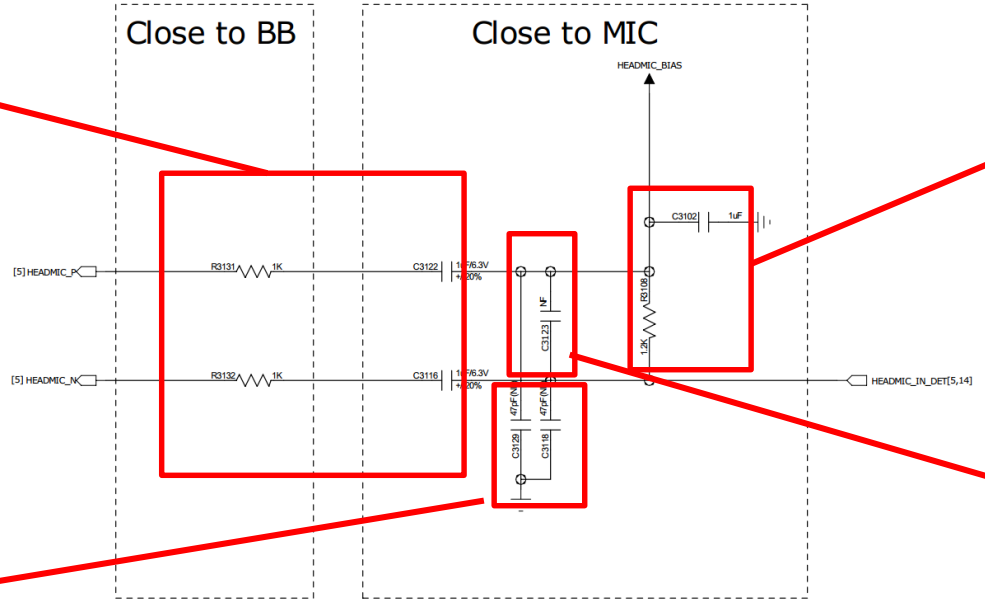

C3102 set the filter, which can reduce the noise on the HEAD_MICBIAS.
If HP vol+/vol- function is supported, R3108 should use +/-1% precision resistor.

C3123 is reserved for RF noise filtering and differential mode noise suppressing.

Audio 14/34

Unisoc Confidential For longcheer Informal

Headphone (Continued)

[1] Normal open ear jack is strongly recommended.
[2] The 33Ω resistor and 1nF capacitor are used to eliminate high frequency noise (fc>=4.82MHz).
[3]The inductor's DCR should be less than 0.35Ω for good crosstalk performance.
[4] AMPG_VCOM should be connected to audio.
[5] FB3100, FB3102, FB3103 and FB3104 will affect HP THD_N.
[6] R3101 and R3102 are used for selfie.
[7] For better ESD, this TVS should be mounted.

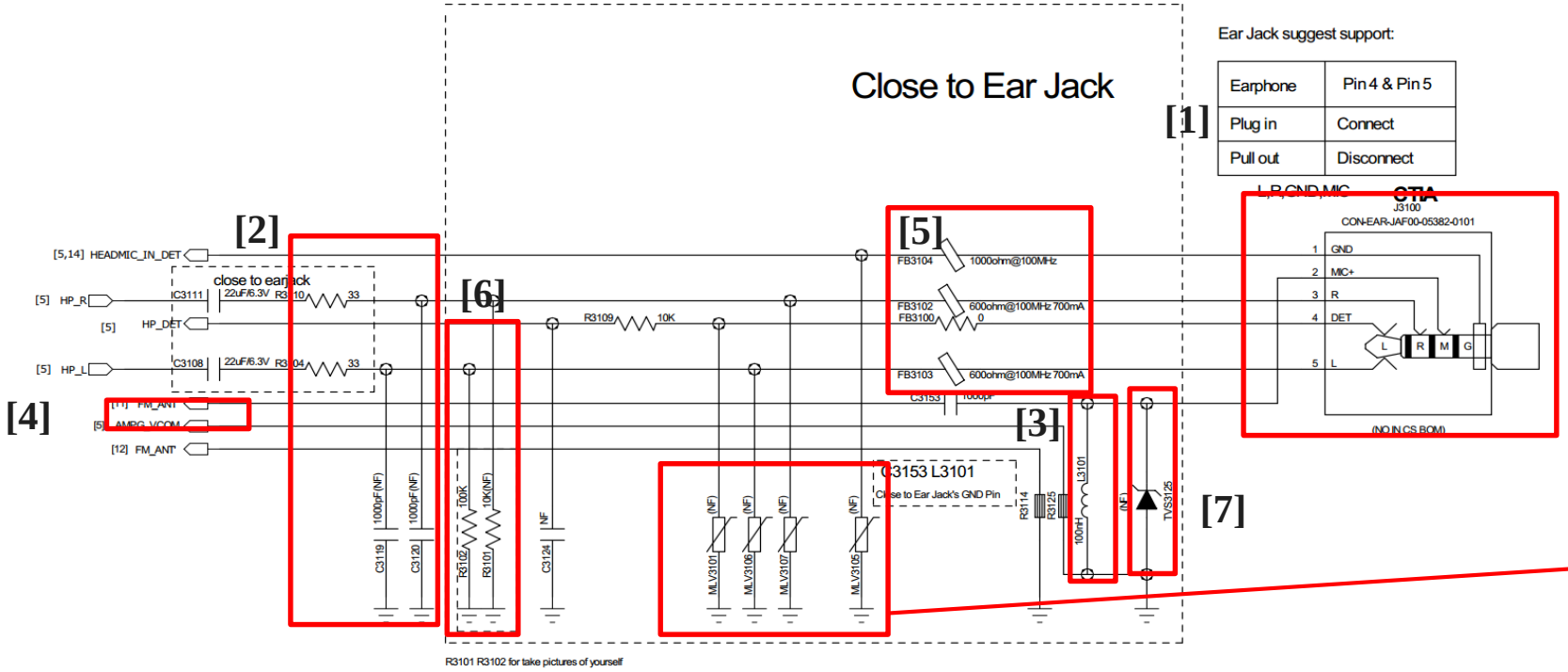

If ESD test passes, MLV3101, MLV3105~MLV3107 can be deleted. Or it is recommended to mount them.

Audio 15/34

Headphone (Continued)

Unisoc Confidential For longcheer Informal

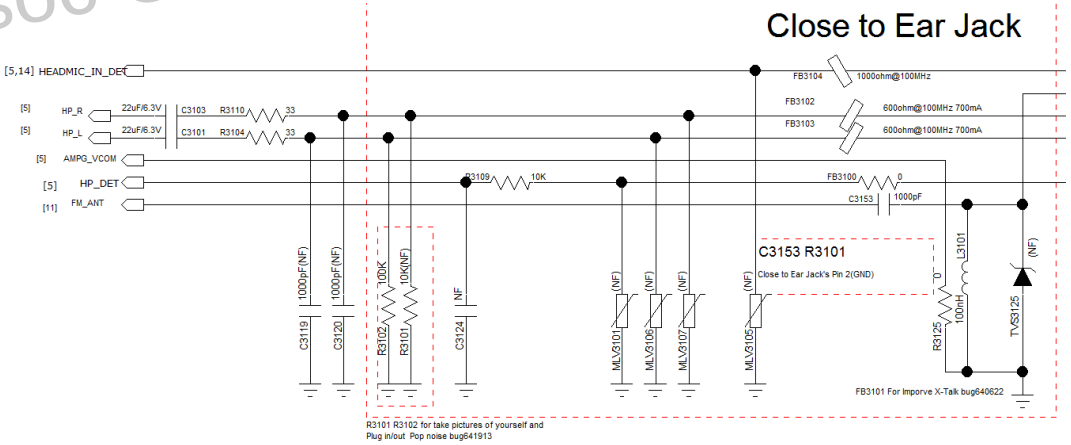

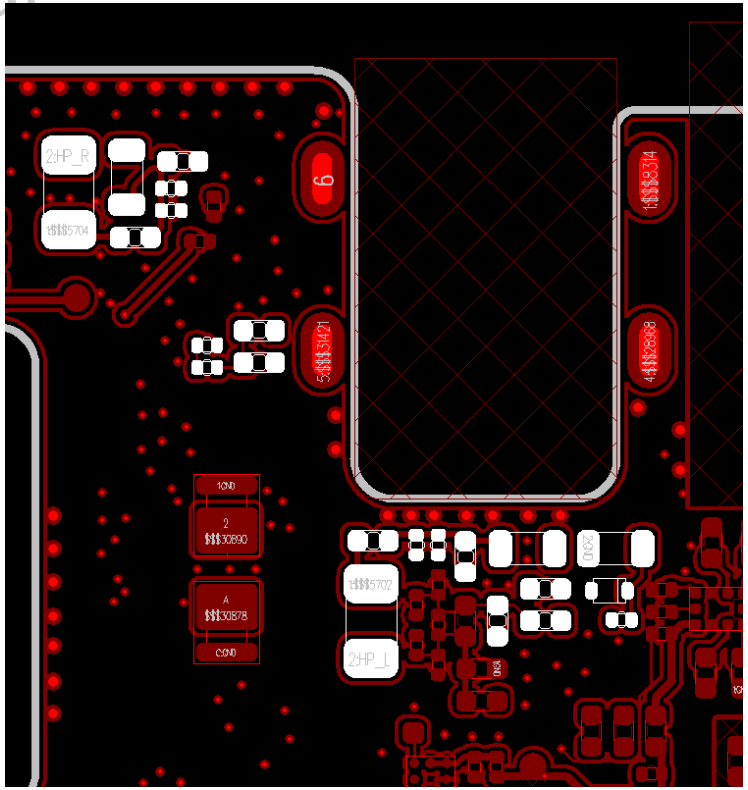

- The capacitors of HP_L and HP_R should be close to ear jack.
- The ESD and filter components of headphone should be close to connector
- Under the ear jack pads layer, do not route digital, analog and control signals.

Audio 16/34

Headphone (Continued)

Unisoc Confidential For longcheer Informal

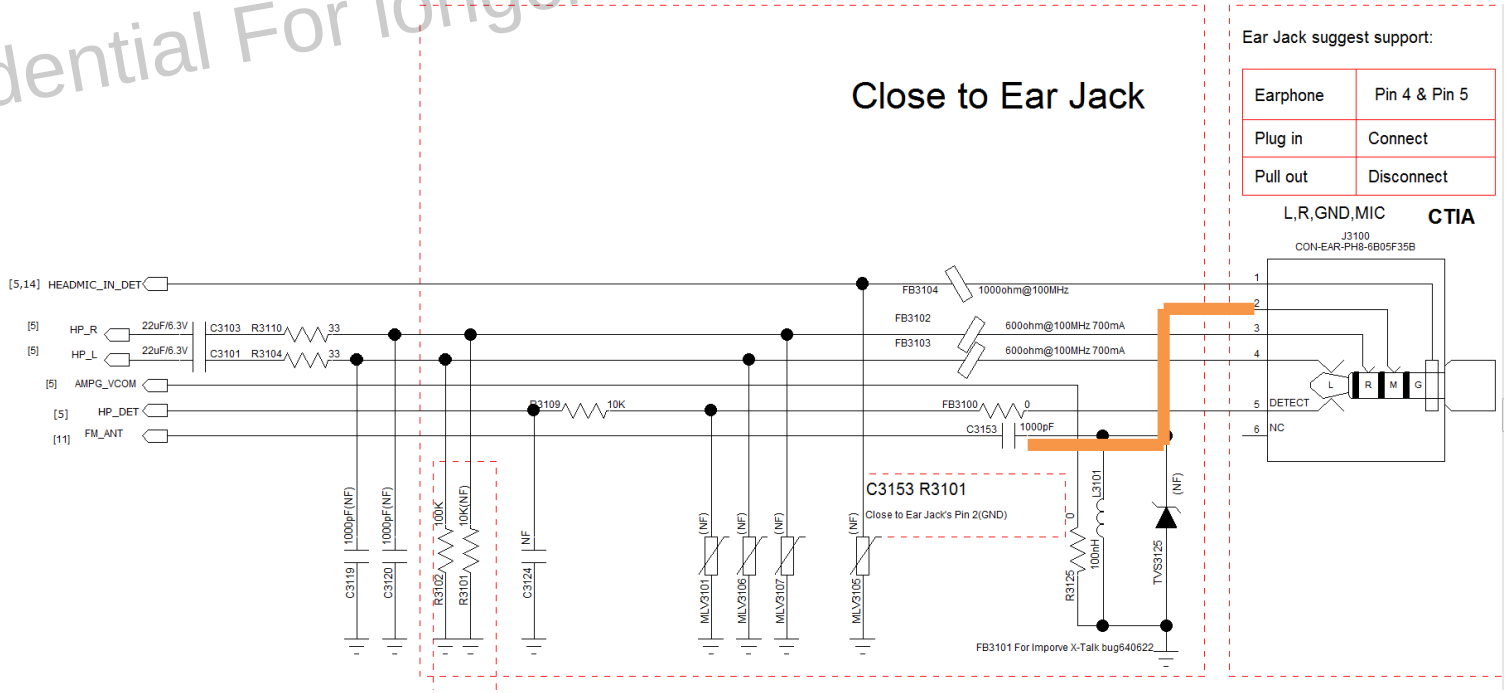

- To get better HP crosstalk performance, trace between L3101 and HP_JACK GND pin should be 0.3mm at least.
- At the same time, the max DCR between L3101 and HP_JACK GND pin should be 0.05Ω.

Audio 17/34

UNISOC

Headphone (Continued)

Unisoc Confidential For longcheer Informal

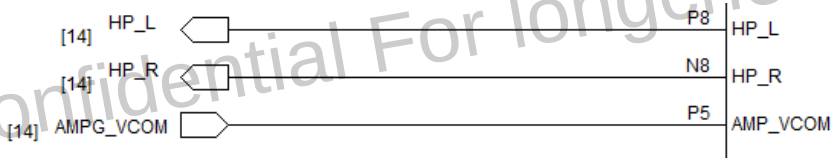

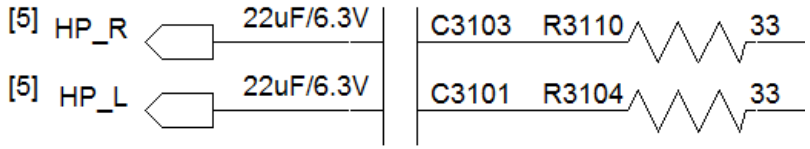

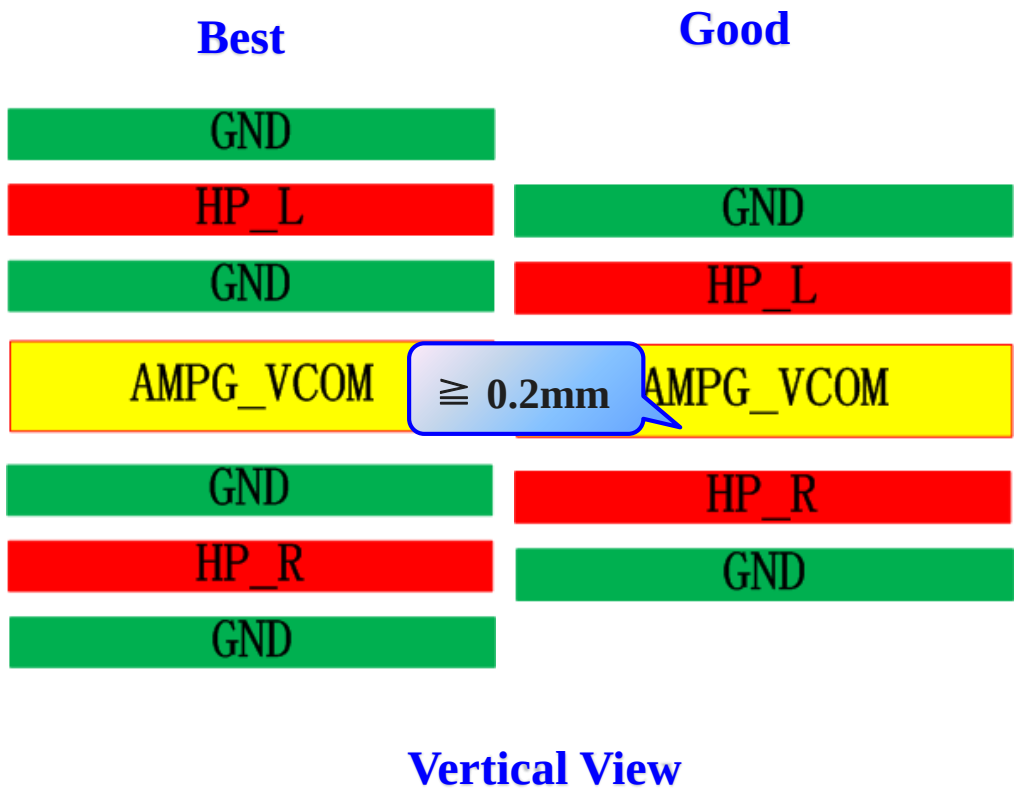

HP_L/HP_R

- HP_L /R width should be ≧ 0.1mm.
- AMPG_VCOM width should be ≧ 0.2mm.
- HP_L /HP_R are stereo signals and should be shielded by GND alone.
- AMPG_VCOM should be routed between HP_L & HP_R.
- The other signals above or under headphone jack signals should be routed GND between adjacent layers.

Audio 18/34

Codec

[1] C0213 must be placed as close to SC2721G pins as possible in PCB. N4 and M8 must firstly be connected to C0213 power pin independently. N4 and M8 can not be connected together directly, and then to C0213 power pin.

[2] AGND_VB and AGND_VBO should be isolated with other area and routed to main GND.

[3] AMPG_VCOM must be protected by GND in all route.

[4] VSS_PA should be isolated with other area and routed to main GND.

[5] SC2721G does not support Class G, C0205 and C0208 must use 22μF/0805 cap.

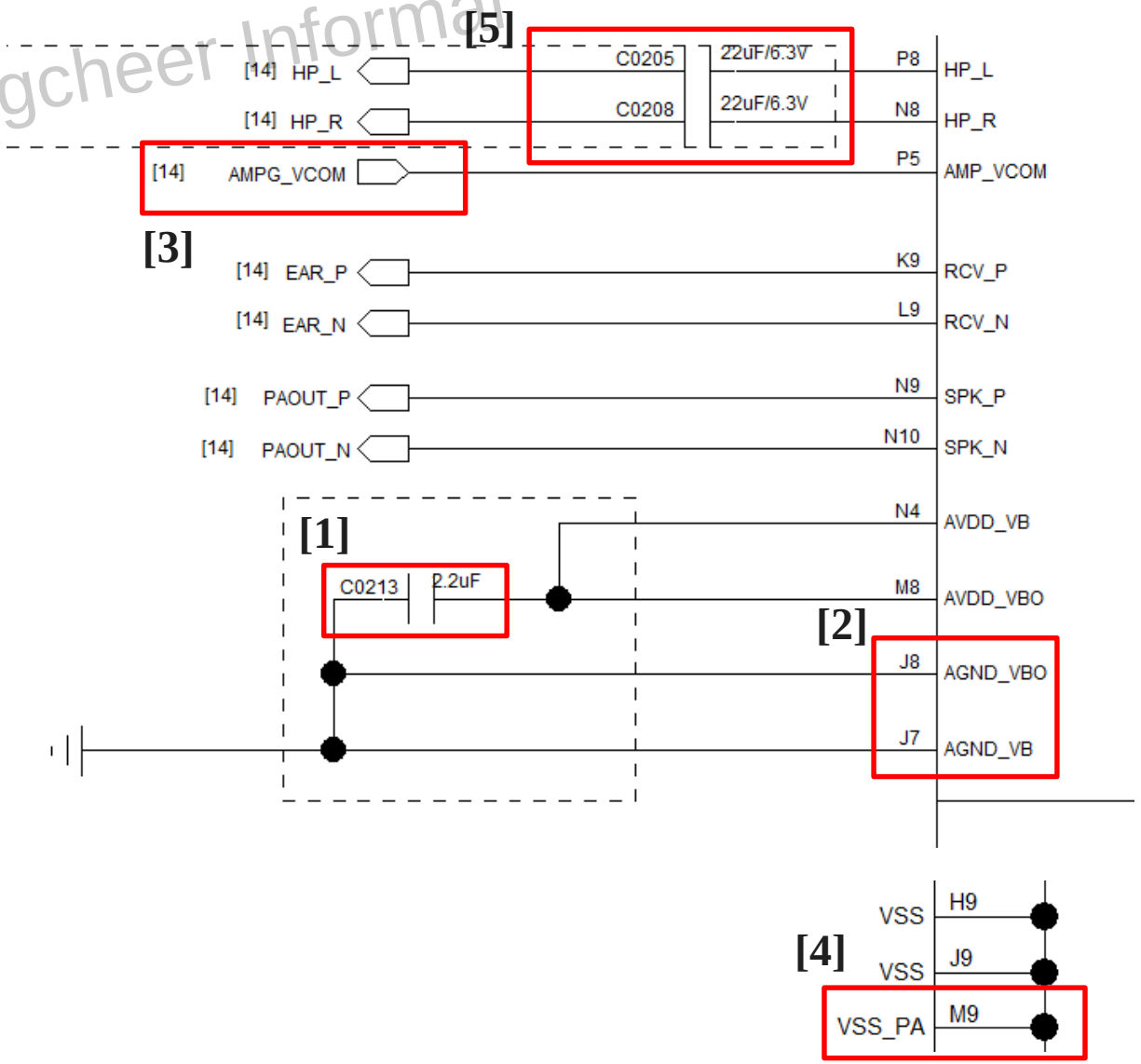

Unisoc Confidential For longcheer Informal

Audio 19/34

UNISOC

Speaker

Unisoc Confidential For longcheer Informal

Integrated PA Solution

Class-D mode: @4.2V, 800mW on 8Ω load

Class-AB mode: @4.2V, 500mW on 8Ω load

Value	Res	Cap
Default	0Ω	NF
Option	Bead	100pF

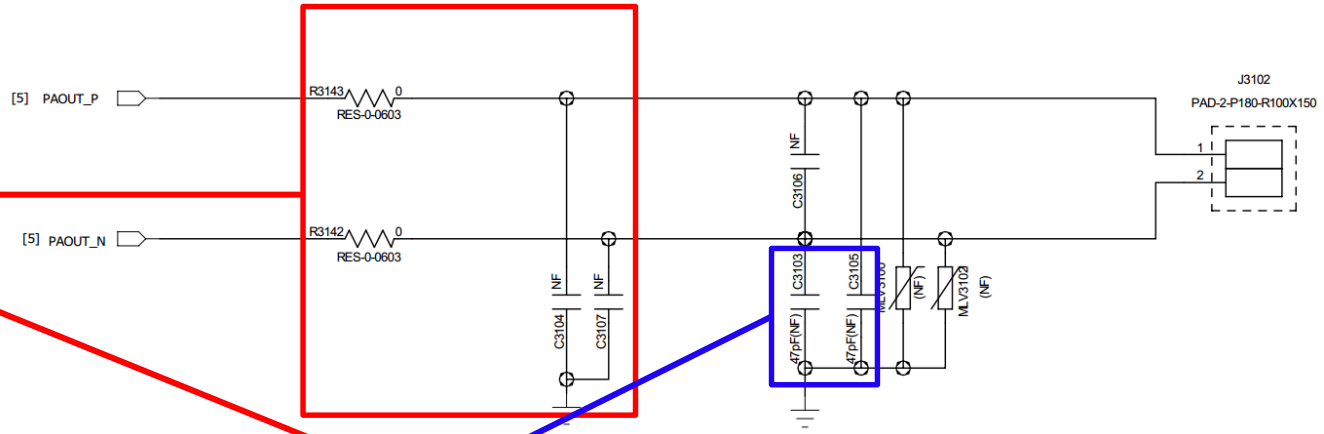

C3136 and C3137 (C3103 and C3105) are used to restrain RF disturbance. Connect them together then to main GND by a single via directly. It is recommended to use 0402 size, which can be changed to TVS/MLV for ESD issue.

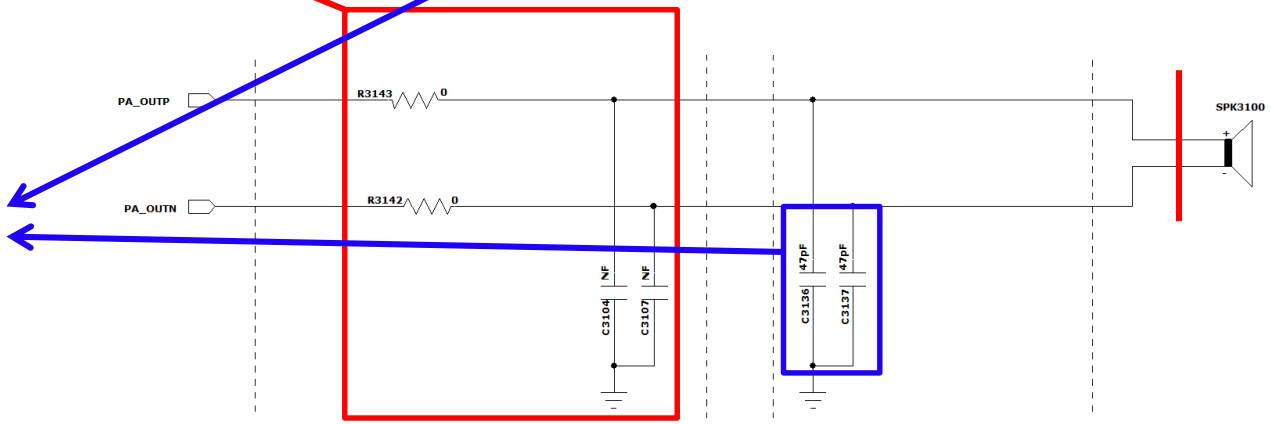

Audio 20/34

Speaker (Continued)

Unisoc Confidential For longcheer Informal

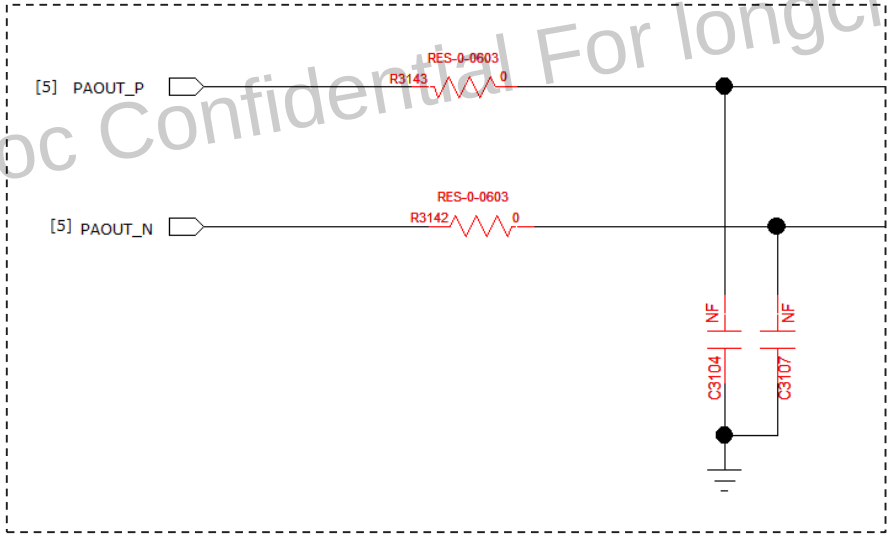

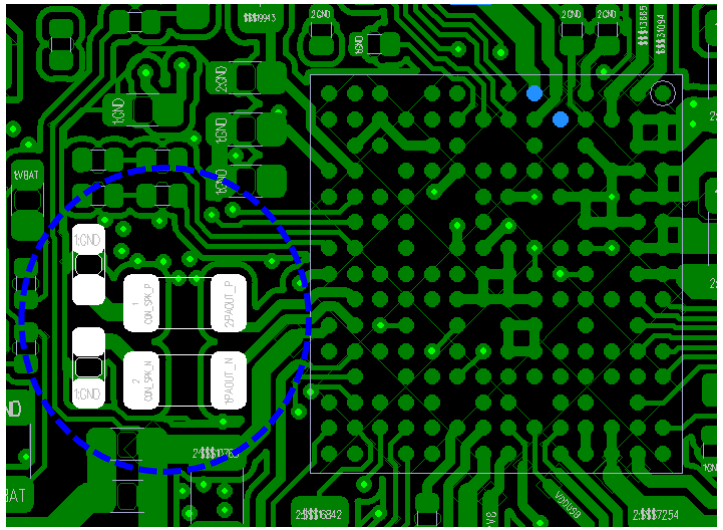

- The RC filter circuit should be placed close to SC2721G.
- SPK_P/SPK_N should be routed as differential pair and trace width ≧ 0.5mm.
- SPK_P/SPK_N should be shielded by GND.
- Change layer:
  Laser via number ≧ 2 buried via number ≧ 1
- Keep resistance of SPK_P plus SPK_N less than 1Ω.
- Under the speaker pads layer, do not route digital, analog and control signals.

Audio 21/34

UNISOC

Receiver

Unisoc Confidential For longcheer Informal

R3111 and R3112 can be changed to bead in order to restrain RF disturbance.

C3126 is for RF noise filtering and differential mode noise suppressing.

C3127 and C3128 are used to restrain RF disturbance. Connect them together then to main GND by a single via directly.

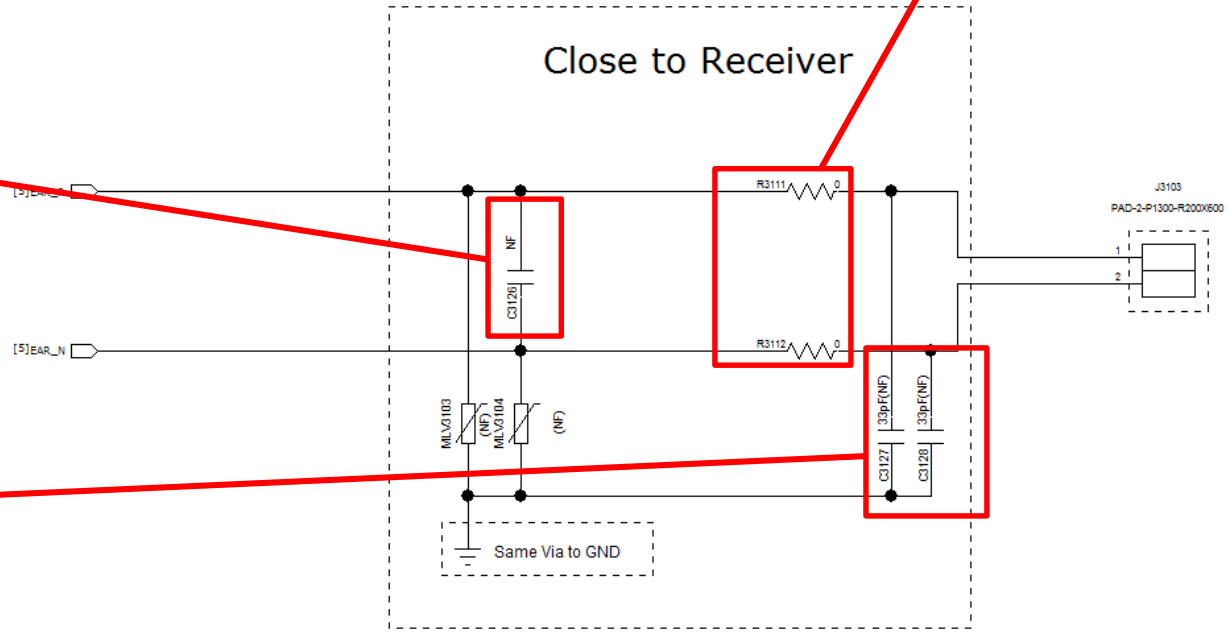

Audio 22/34

Receiver (Continued)

Unisoc Confidential For longcheer Informal

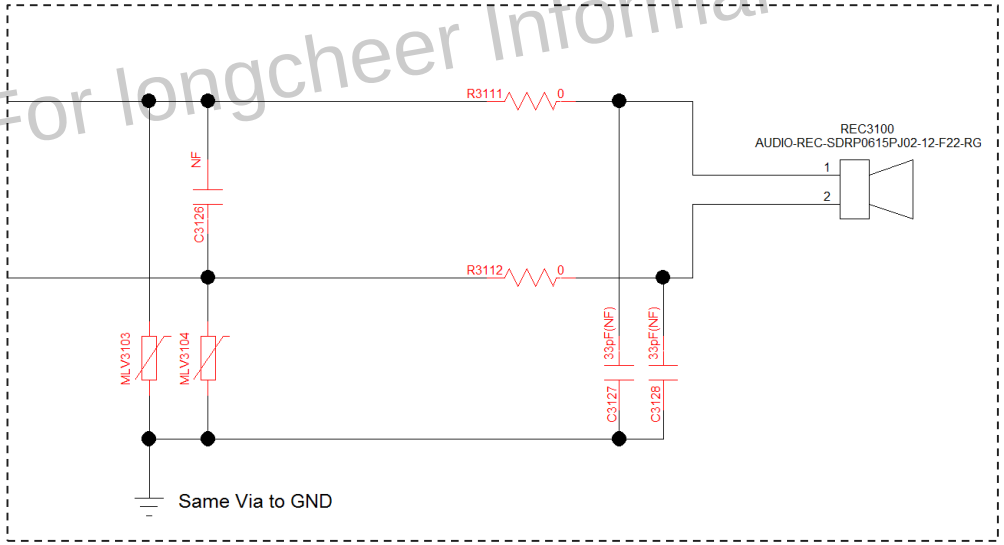

The Capacitors and Resistors should be placed close to receiver.

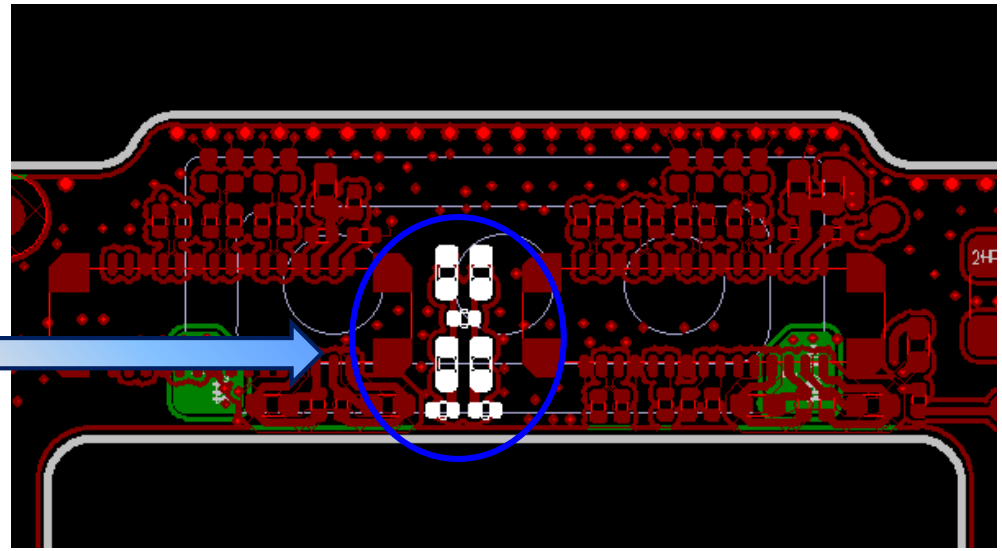

Audio 23/34

UNISOC

Receiver (Continued)

Unisoc Confidential For longcheer Informal

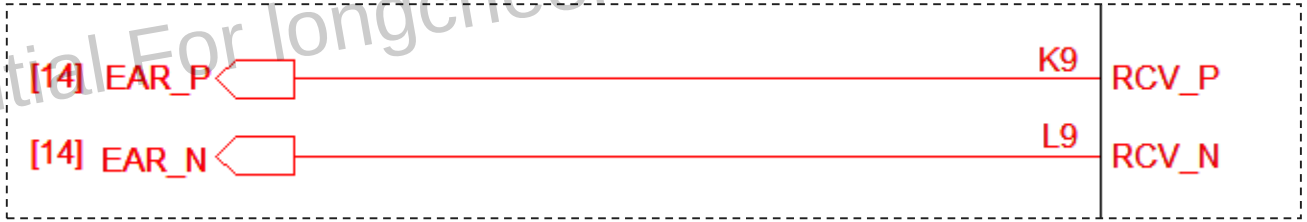

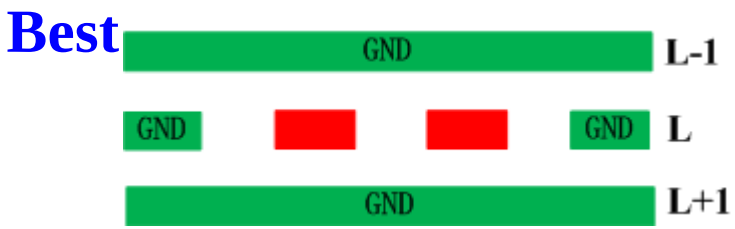

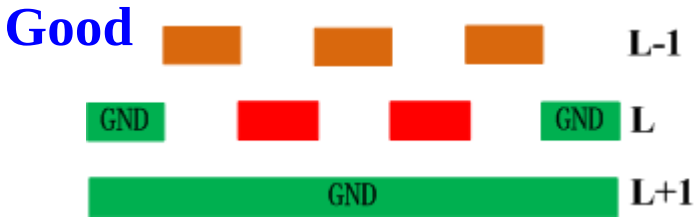

EAR_P/N

- Should be routed as differential pair and shielded by GND.
- Traces width should be ≧ 0.15mm.
- The other signals above or under the receiver signals should be routed orthogonally between adjacent layers.
- Under the receiver pads layer, do not route digital, analog and control signals.

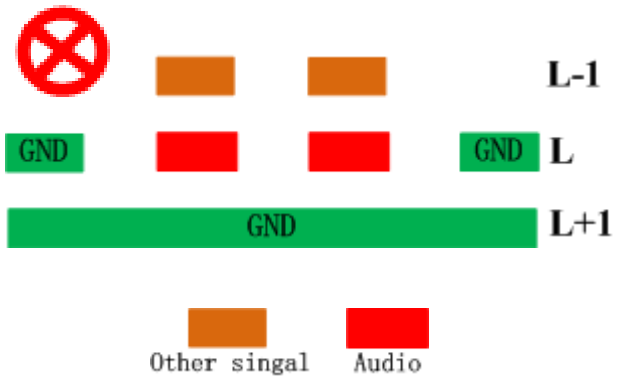

Audio 24/34

UNISOC

Receiver & Speaker 2 in 1

Unisoc Confidential For longcheer Informal

[1] Receiver's input comes from SPK_P/SPK_N of SC2721G.

[2] Bead & cap need to be used together or deleted together (if no EMI issue).

[3] 47pF caps can be changed to TVS/MLV for ESD issue.

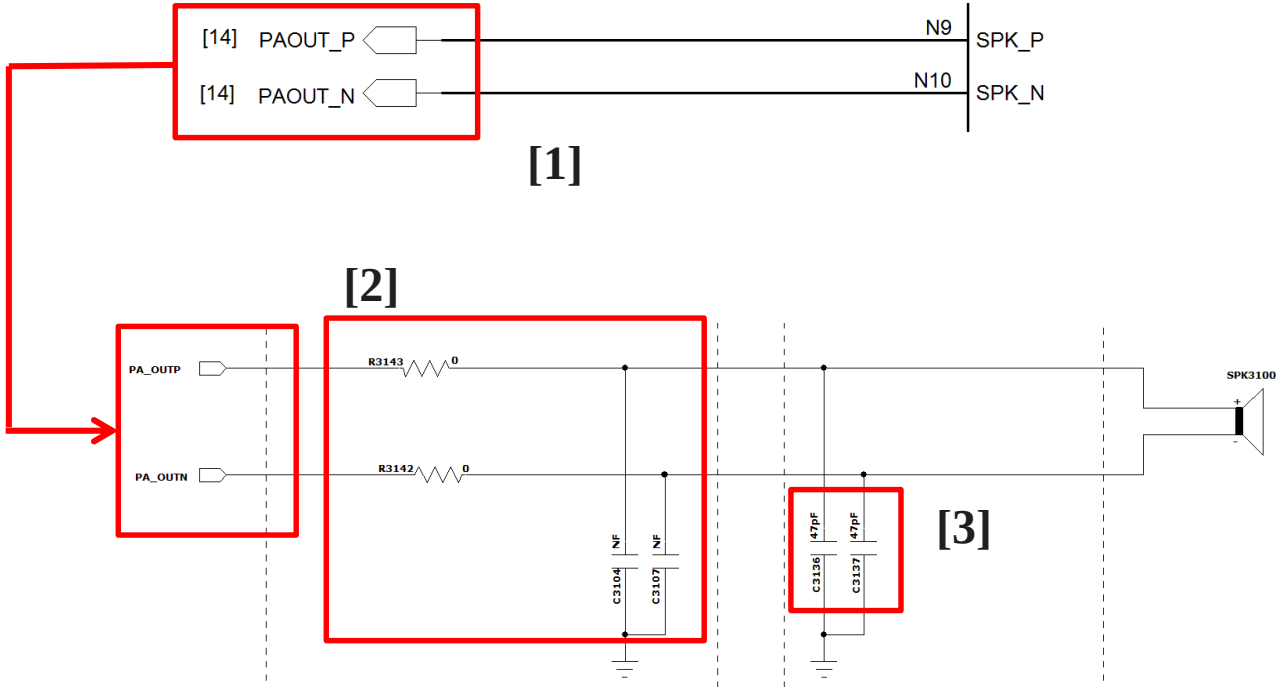

Audio 25/34

UNISOC

Ear Jack

Unisoc Confidential For longcheer informal

Ear Jack Type

Ear Jack suggest support:

Earphone	Pin 4 & Pin 5
Plug in	Connect
Pull out	Disconnect

L,R,GND,MIC CTIA

CTIA America standard
Ear Jack need support:

Earphone	Pin 3 & Pin 4, Pin 6 & pin 7
Plug in	Connect
Pull out	Disconnect

CTIA:L/R/G/M

No switch in Ear Jack

Ear Jack:

Earphone	Pin 3 & Pin 6
Plug in	Disconnect
Pull out	Connect

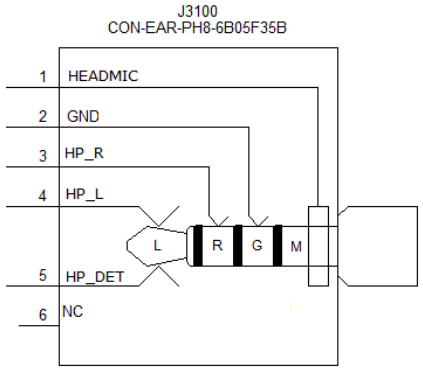

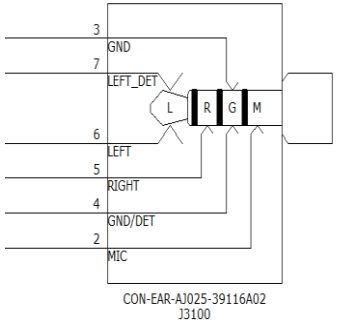

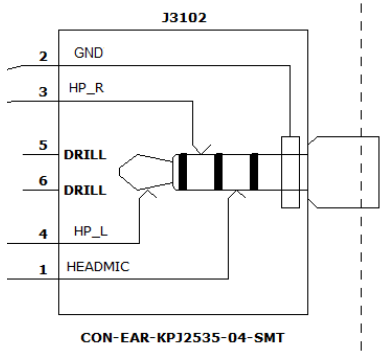

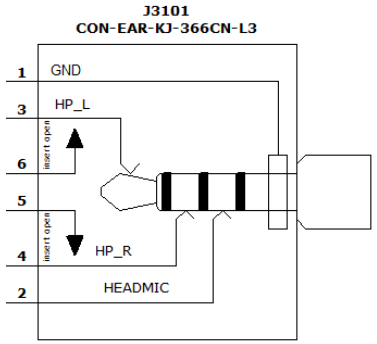

Type 1: Switch (NO) without G_DET

Type 2: Switch (NO) with G_DET

Recommended

Type 3: No Switch

Type 4: Switch (NC)

Not Recommended

Note 1

NO: Normal Open

NC: Normal Close

Note 2

OMTP (L\R\MIC\GND): Swap MIC & GND based on CTIA

UNISOC

Unisoc Confidential For longcheer Informal

Ear Jack (Continued)

- Type1, 2, 3, 4 headset detection use HP_DET.
- Type 3 and type 4 HP_DET are connected to headset left channel, and the current of type 4 rises about 100μA compared to type 3.
- Type 1 and type 2 are recommended.
- HEADMIC_IN pin is used to detect headset type and also used while headset plug out.

HP_DET Level Logic

Headset Status	Plug out	Plug in
HP_DET	1	0

Audio 27/34

Ear Jack (Continued)

Unisoc Confidential For longcheer Informal

Solution for Type 1 Ear Jack (Recommended)

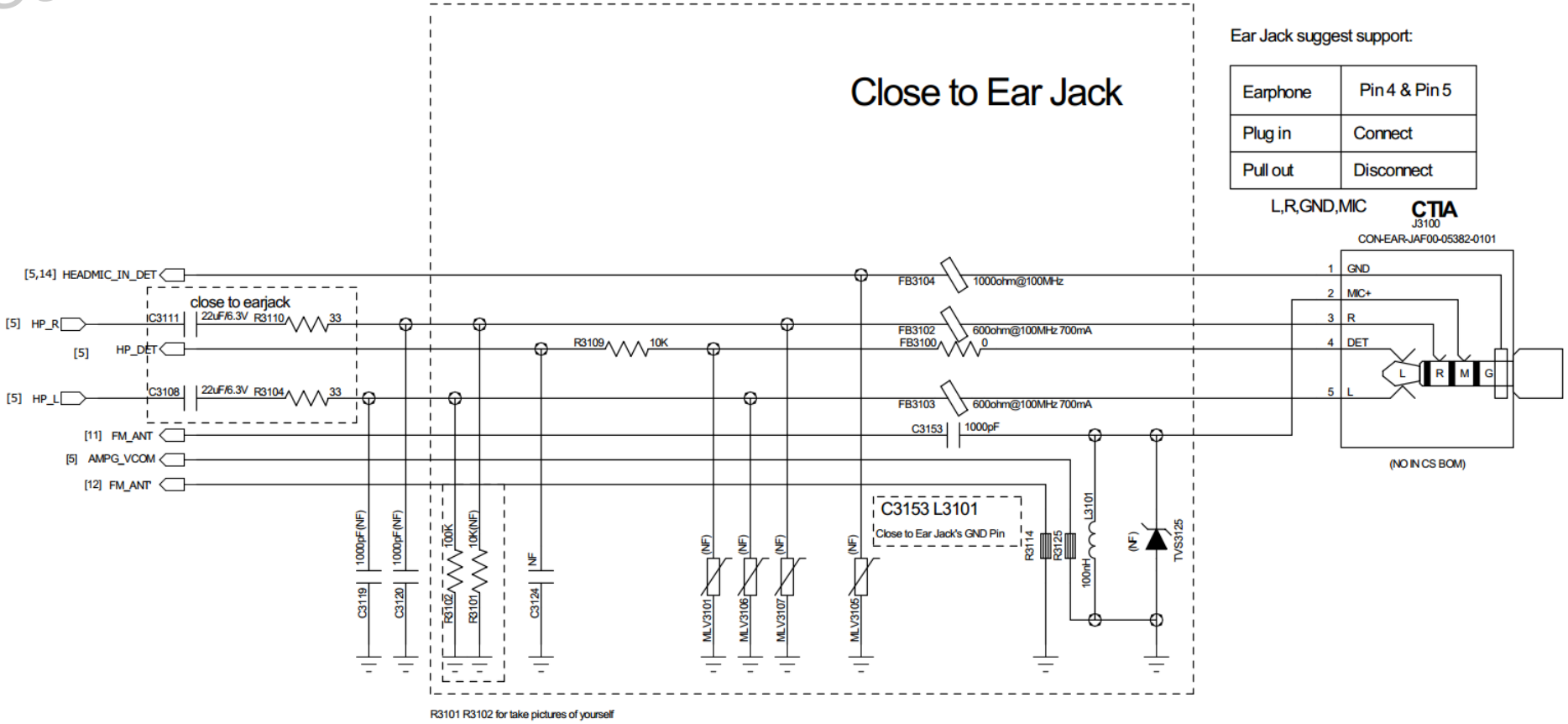

Audio 28/34

UNISOC

Ear Jack (Continued)

Unisoc Confidential For longcheer Informal

Solution for Type 2 Ear Jack (Recommended)

GND_DET is connected
to the GND of SC2721G.

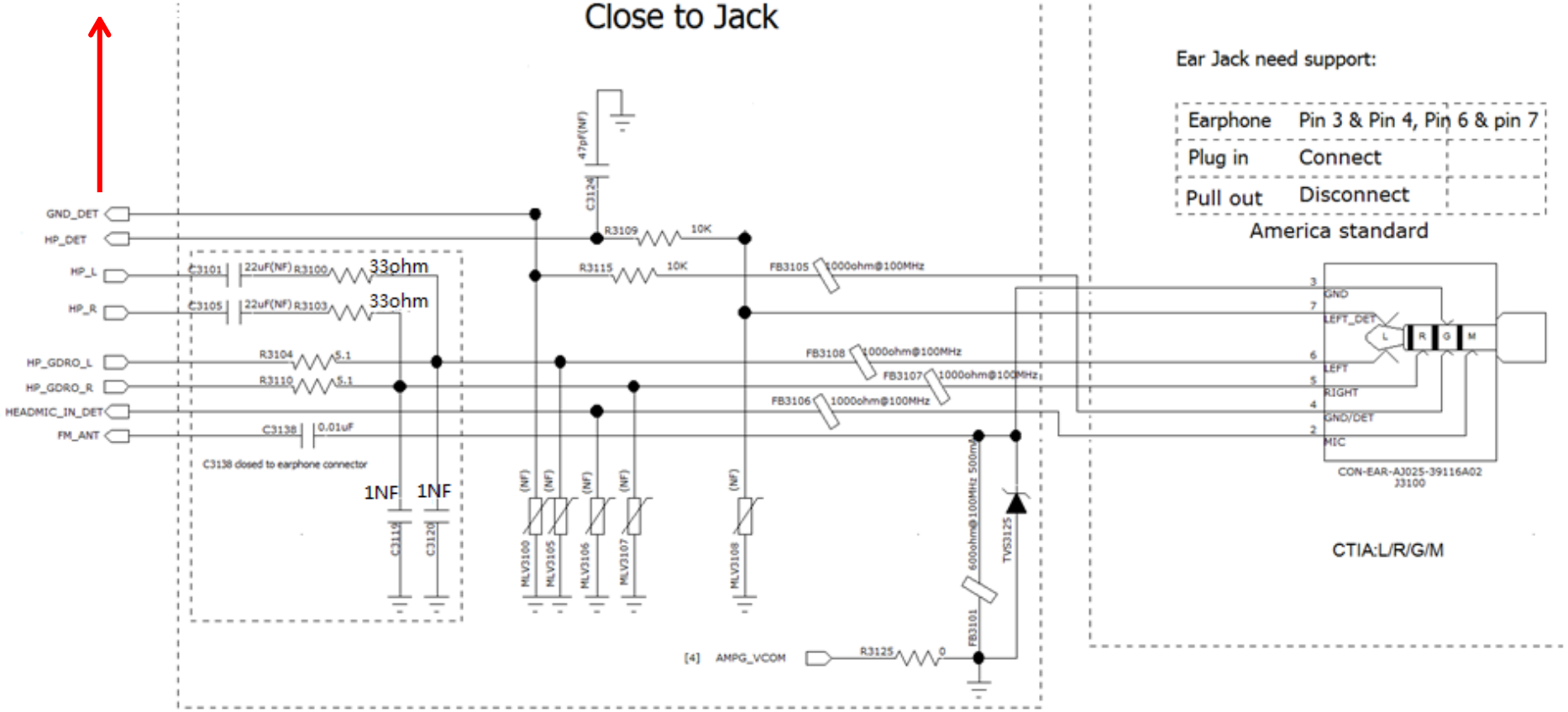

Audio 29/34

Ear Jack (Continued)

Unisoc Confidential For longcheer Informal

Solution for Type 3 Ear Jack (Not Recommended)

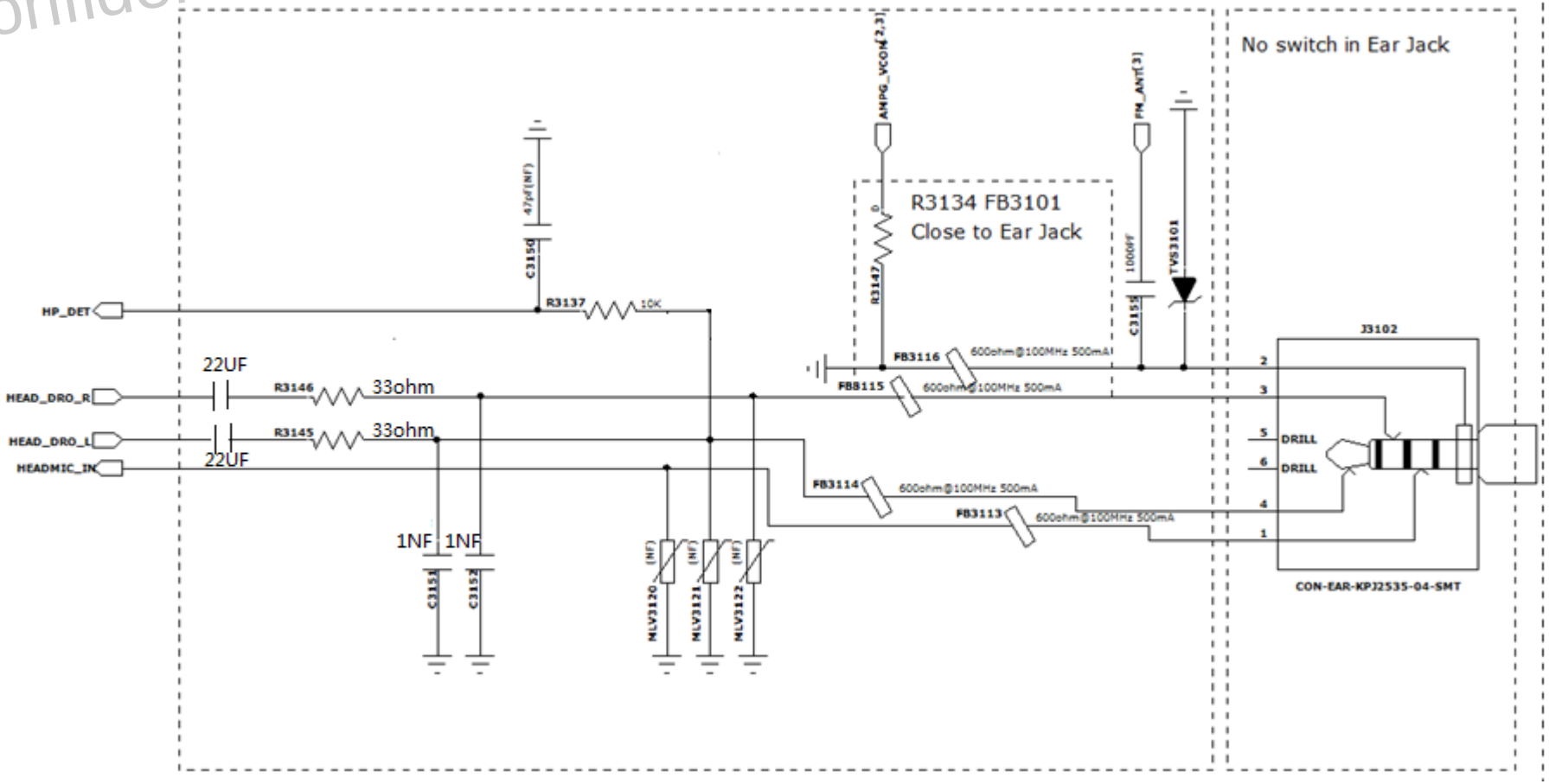

UNISOC

Ear Jack (Continued)

Unisoc Confidential For longcheer Informal

Solution for Type 4 Ear Jack (Not Recommended)

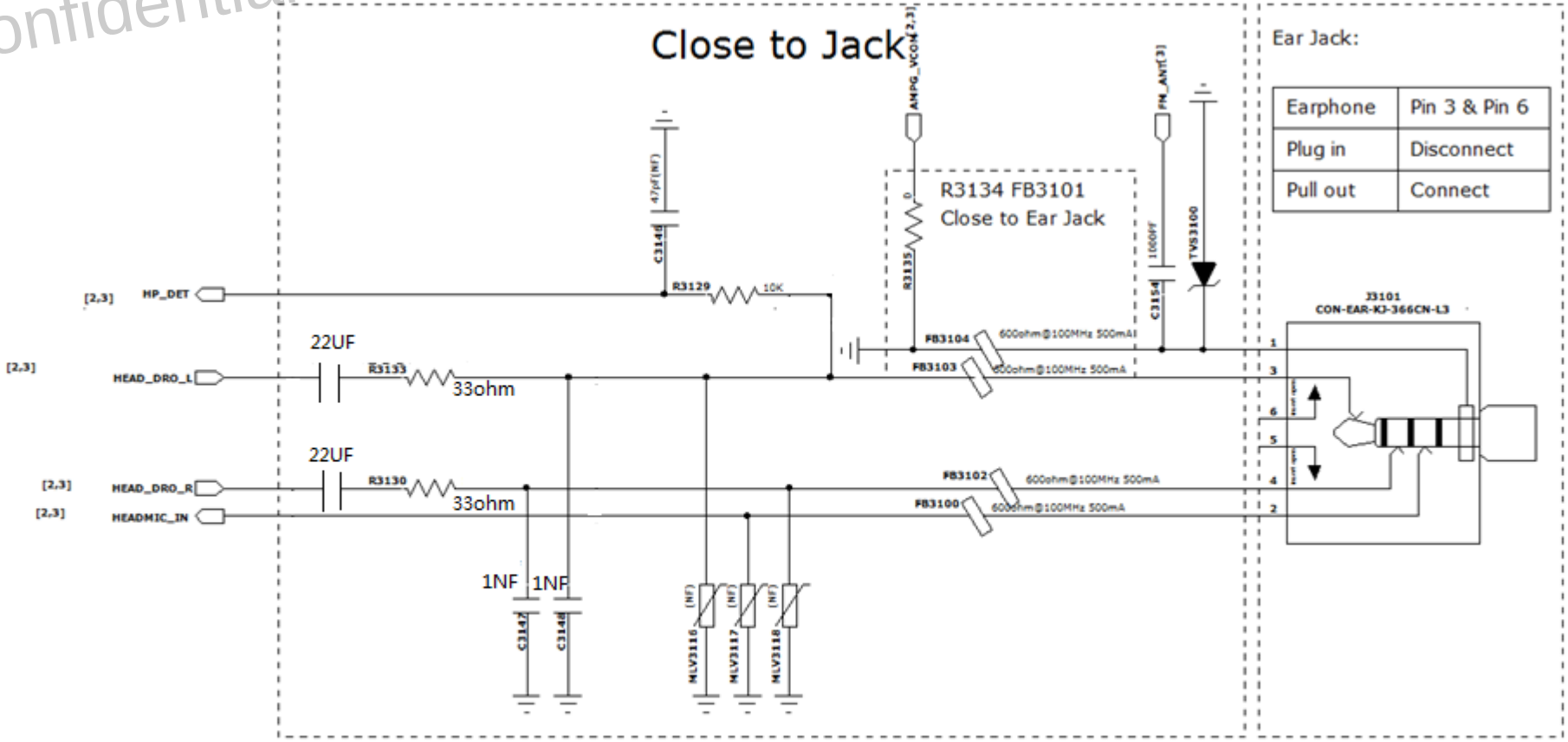

Audio 31/34

UNISOC

Ear Jack (Continued)

Unisoc Confidential For longcheer Informal

- If ear jack is not used, make sure that AMPG_VCOM is connected to GND with series resistor.
- If audio function is not used, make sure that AMPG_VCOM is connected to GND with series resistor.

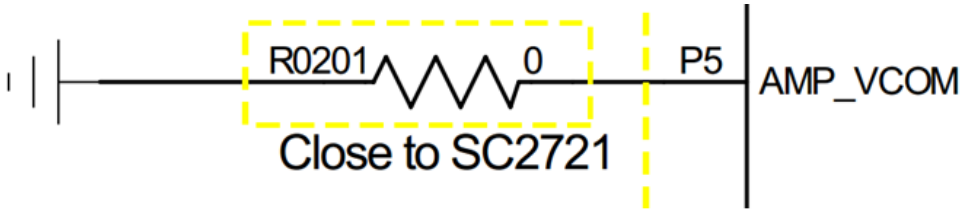

Audio 32/34

Audio Capacitors

Unisoc Confidential For longcheer Informal

The Capacitors of MICBIAS, HEADMICBIAS, AVDDVB and AVDDVBO should be close to power ball of the PMU.

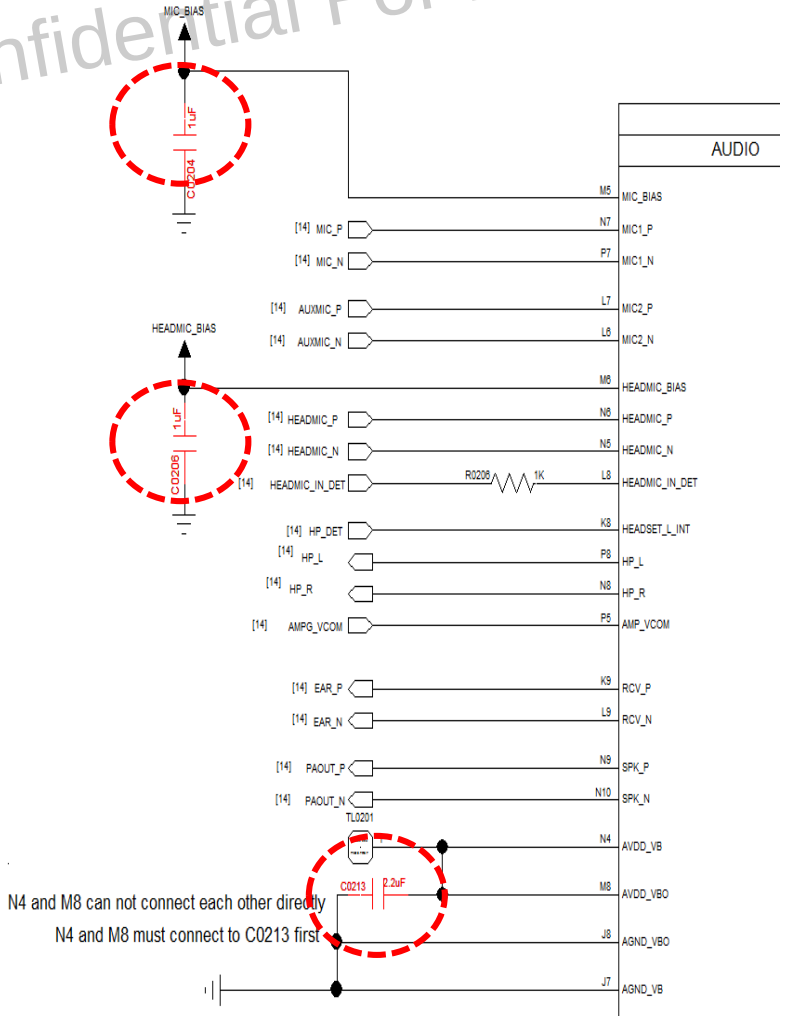

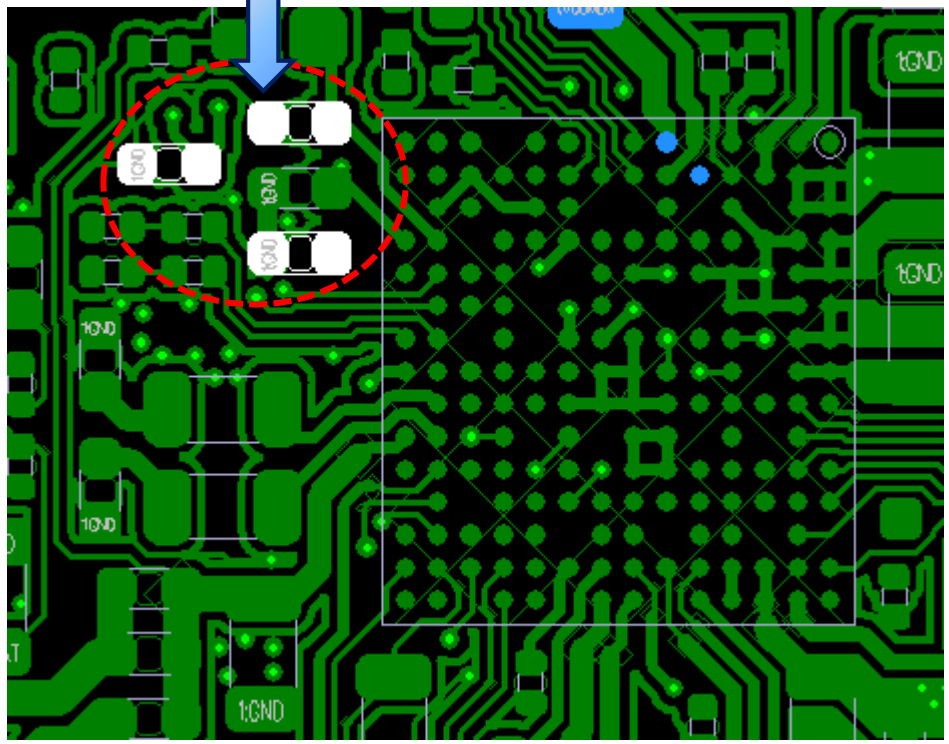

Audio 33/34

Audio VDD

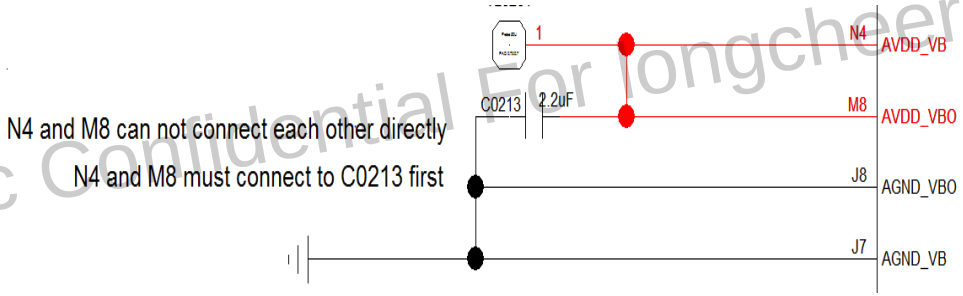

N4 and M8 must firstly connect to C0213 power pin independently. N4 and M8 can not connect to each other directly, and then to C0213 power pin.

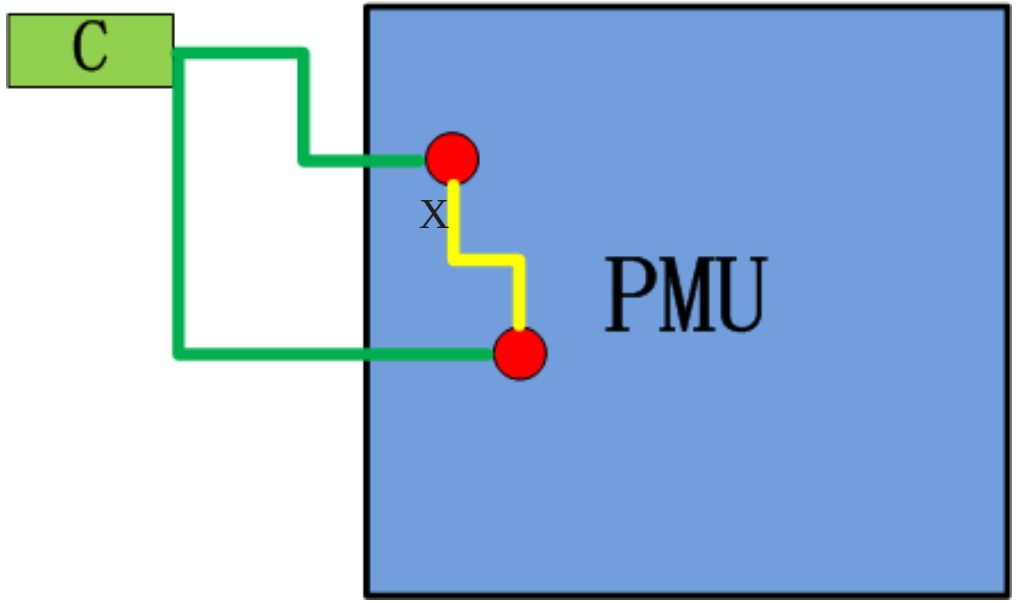

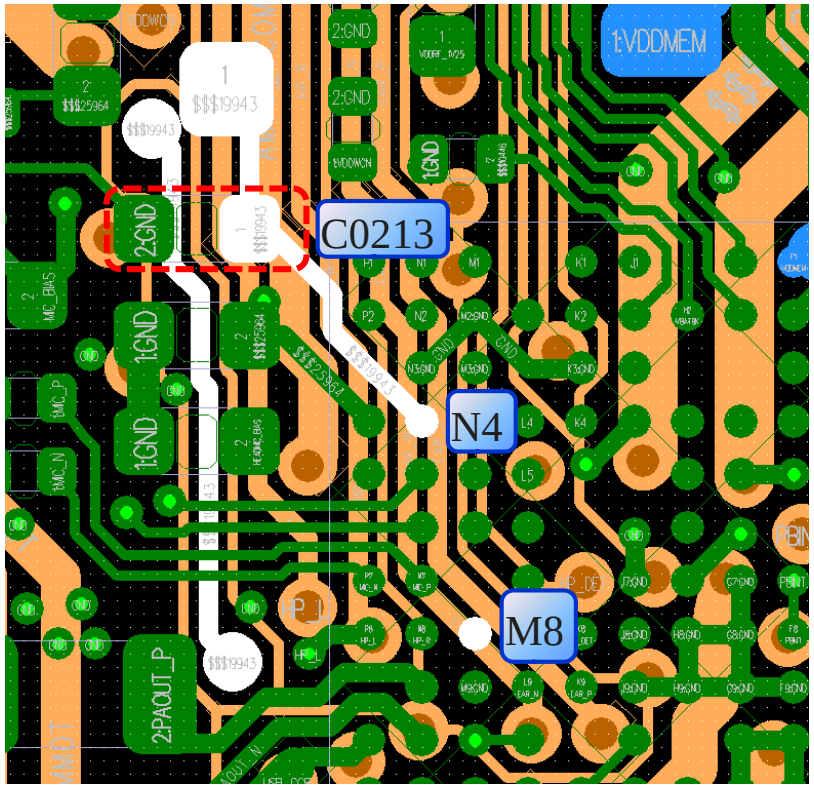

Unisoc Confidential For longcheer Informal

Audio 34/34

Audio GND

Unisoc Confidential For longcheer Informal

N4 and M8 can not connect each other directly
N4 and M8 must connect to C0213 first

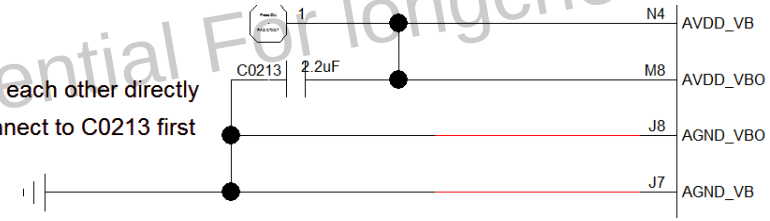

AGND_VB, AGND_VBO and VSS_PA should be connected to main GND layer by vias directly.

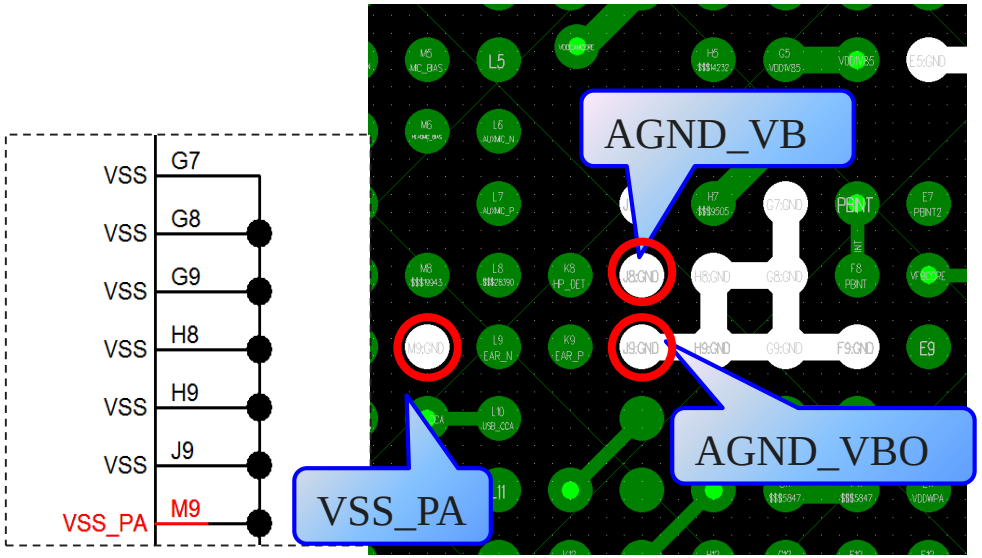

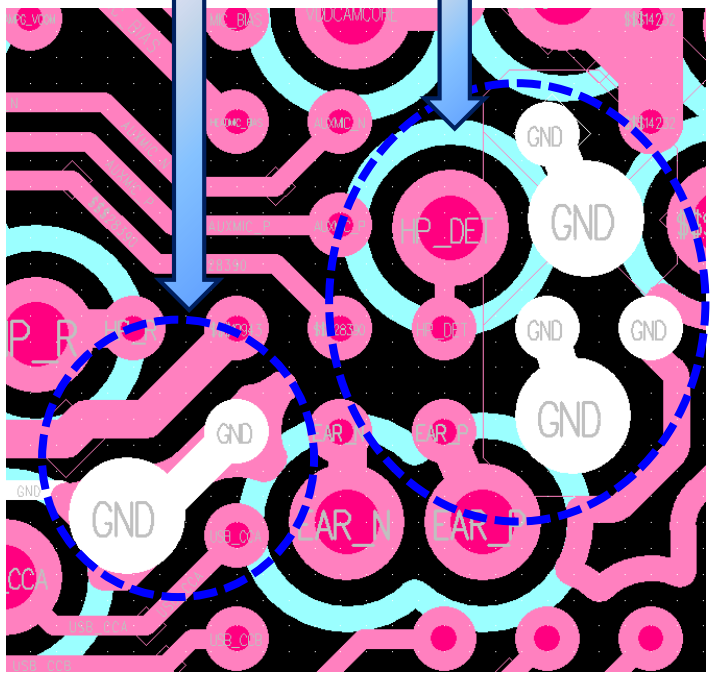

UNISOC

For longcheer Informal
Unisoc Confidential

04

USB

USB 1/4

Unisoc Confidential For longcheer Informal

USB OTG

- It needs external 5.0V power to support USB OTG.
- SC2721G itself does not support switch charge & OTG. You can get these functions with the help of external IC such as FAN54005.

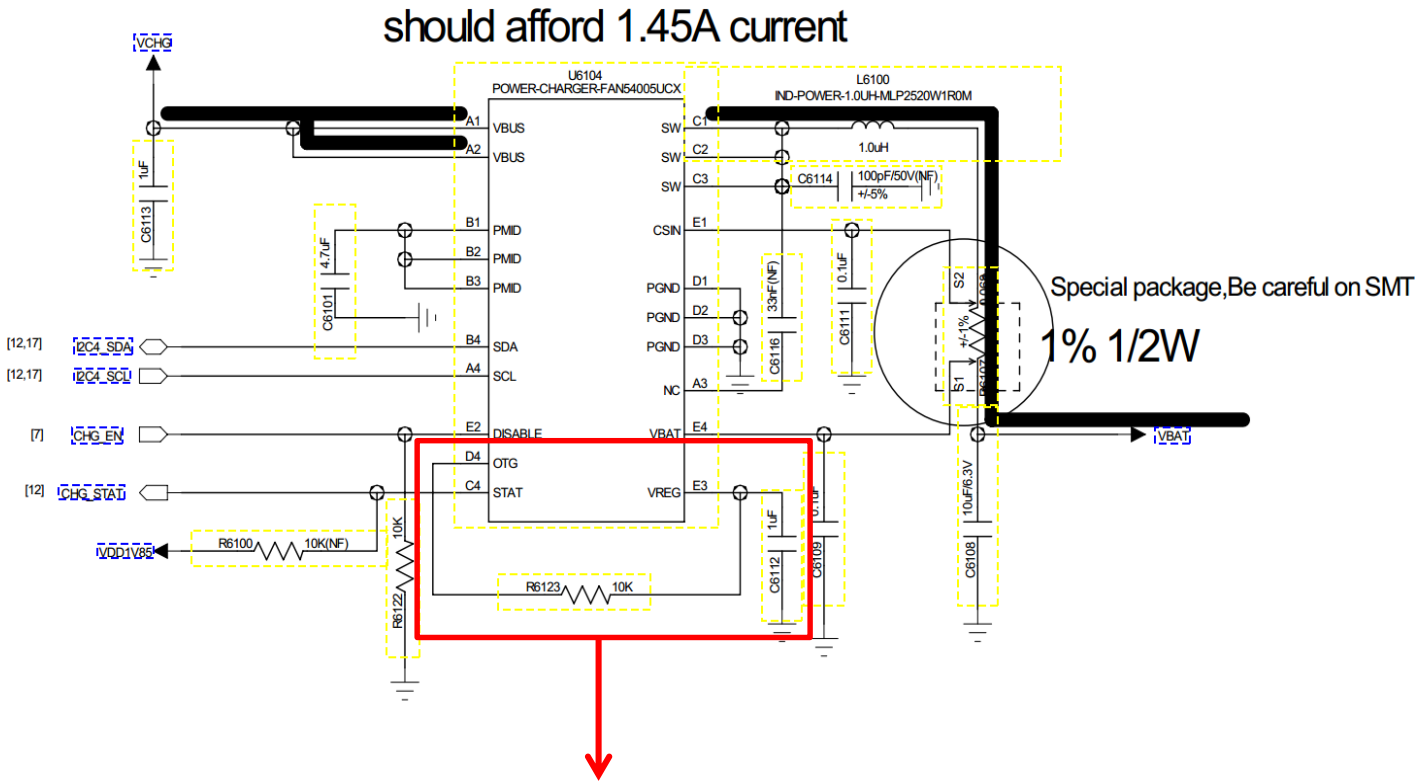

U6104 supports external 5.0V power for USB OTG.

USB 2/4

UNISOC

USB Type-C

UnisOC Confidential For longcheer Informal

- Only support USB2.0. Support host mode, device mode and dual role mode (both host and device modes). You can select the modes you want by software method.
- USB type-C CC control
  There are CC1 and CC2 connected to PMIC to judge attachment, connection, host mode or device mode.
  - Connect CC1 from L10 pin of PMIC to A5 pin of the receptacle.
  - Connect CC2 from M11 pin of PMIC to B5 pin of the receptacle.
  - ESD devices should be mounted on CC1/CC2 near the receptacle.
  - For better ESD performance, reserve resistors (R6203 & R6204) between CC1 & CC2 of the receptacle and CC1 & CC2 of SC2721G.

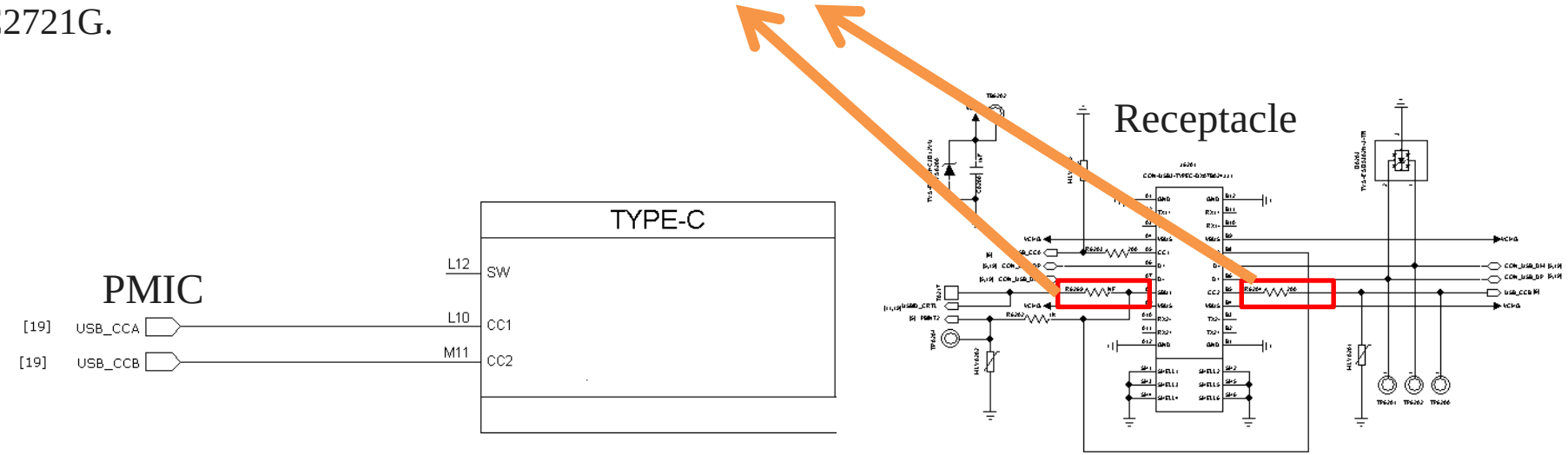

USB 3/4

Unisoc Confidential For Longcheer Informal

USB_DP/USB_DM and BC1.2

USB2.0 90Ω Differential Pair: USB_DP/USB_DM

- Short A6 to B6, A7 to B7 in Type-C receptacle. The maximum shorting trace length should not exceed 3mm in PCB layout.
- It is recommended to reserve test points for USB_DP/USB_DM for debug or test.
- When supporting charge with BC1.2, USB_DP/USB_DM must go through PMIC to the USB connector.

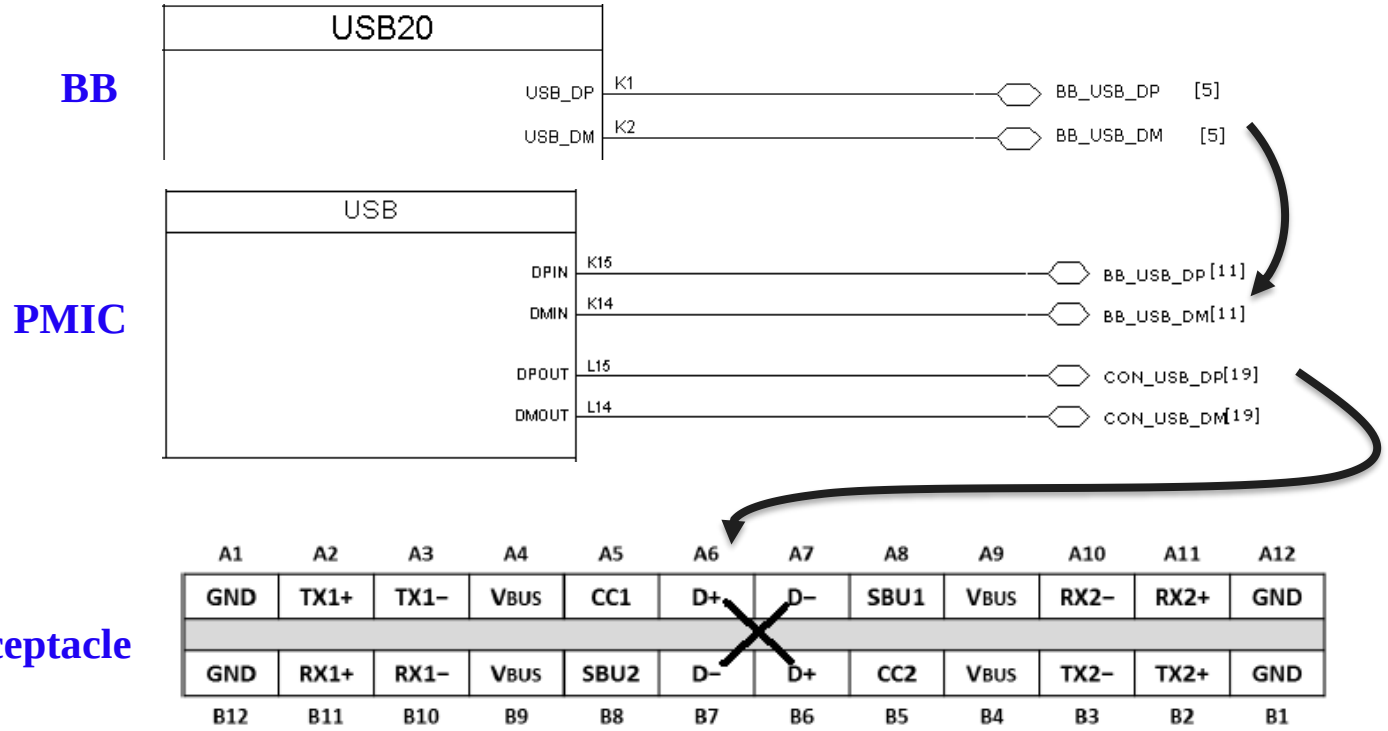

USB 4/4

Unisoc Confidential For longcheer Informal

USB Power and Calibration Resistor

Supply proper power and USB_REXT resistor according to the factual CPU.

- Connect AVDD33_USB to VDDUSB, and the 1μF bypass capacitor should be placed as close to BB as possible in PCB layout.
- Connect AVDD1V8_USB to AVDD1V8, and the 1μF bypass capacitor should be placed as close to BB as possible in PCB layout.

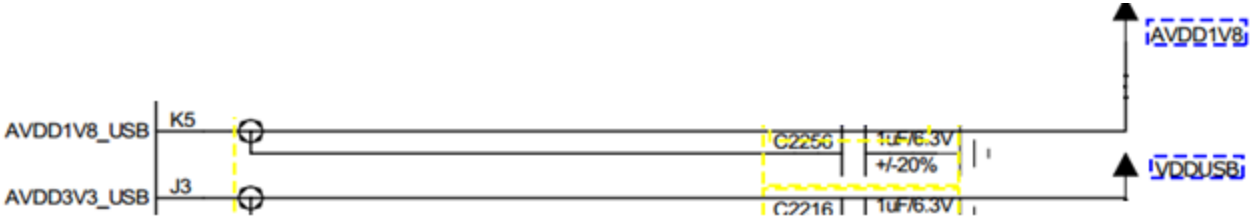

- The USB_REXT resistor must be 6.04kΩ with 1% precision, and should be placed as close to BB as possible in PCB layout. However, as there is the internal resistor, the external resister R2122 can be NF.

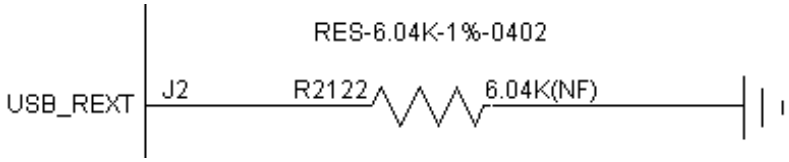

UNISOC

Unisoc Confidential For longcheer Informal

05

Others

Others 1/7

Unisoc Confidential For Longcheer Informal

TSX and 26M Input

PMIC itself does not support TSX clock solution.

The TSX_MODE pin should be connected to GND, and the corresponding VSS pins should also be connected to GND.

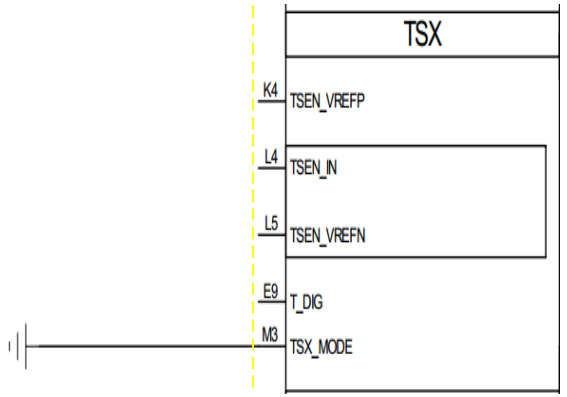

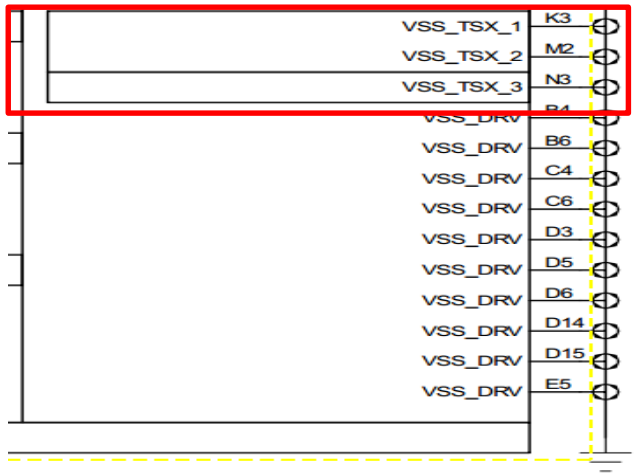

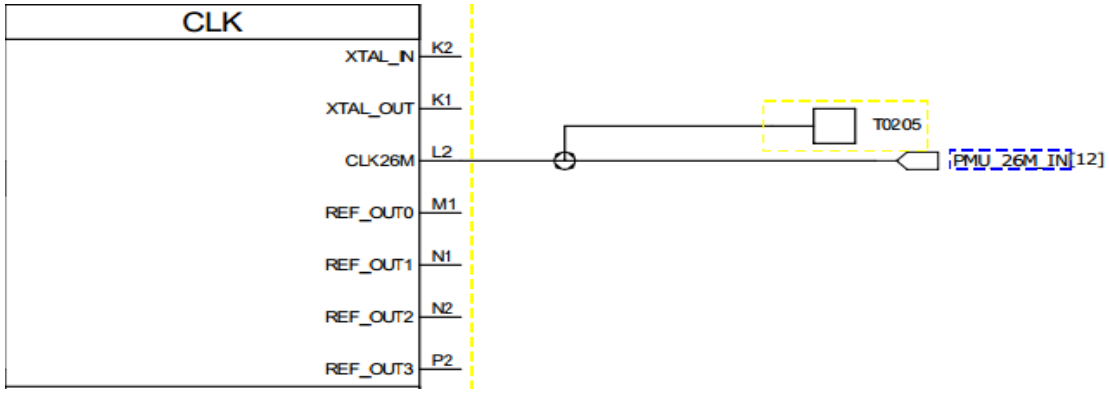

26M Input: PMIC gets 26M clock from the CLK26M pin, and PMU_26M_IN net needs to be protected with GND perfectly.

Others 2/7

UNISOC

RTC

RTC_MODE	0	32K
	1	32K-Less

Unisoc Confidential For longcheer Informal

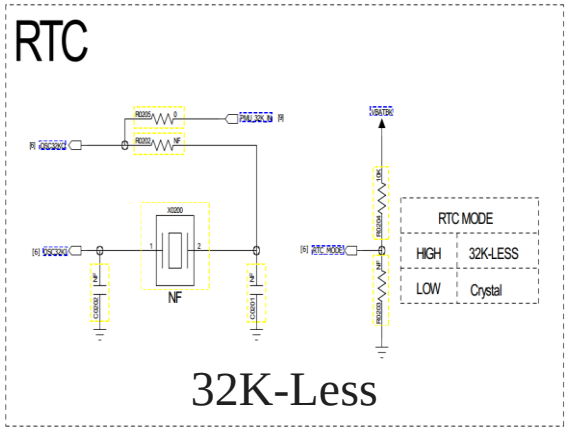

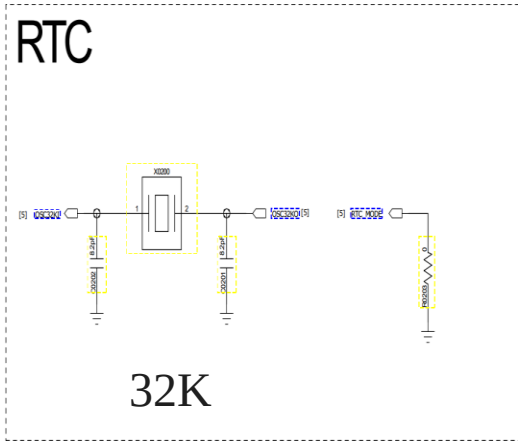

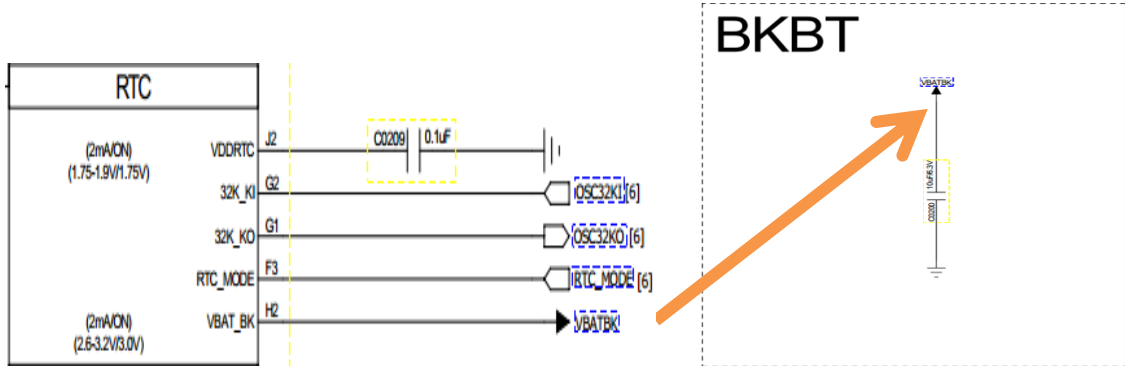

Ball No.	Ball Name	Description
G1	32K_KO	32K crystal clock output, 32K clock input when 32K-Less
G2	32K_KI	32K crystal clock input
J1	DCXO_LOWCUR	DCXO low power mode output signal
H2	VBAT_BK	Backup button cell
J2	VDDRTC	LDO for RTC power output

Parameter	Specification
Frequency	32.768kHz
Frequency Tolerance	±20ppm
Load Capacitance	7pF
Operation Temperature	-40℃~+85℃
Max. Drive Level	1μW

- C0200 supplies power to VBATBK for RTC when without battery.
- C0200 value can be changed according to the maintained RTC time duration that you wanted.

Others 3/7

Unisoc Confidential For longcheer Informal

Vibrator

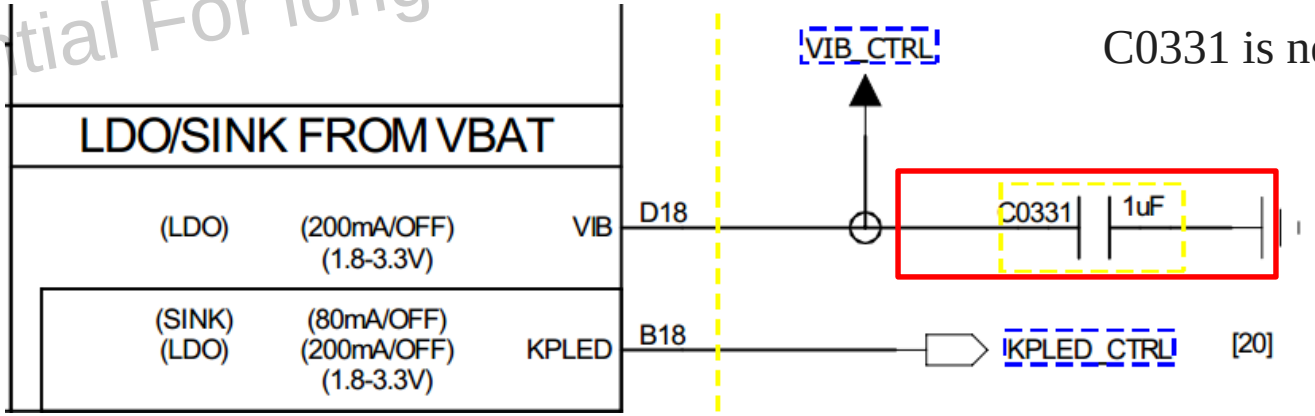

C0331 is necessary.

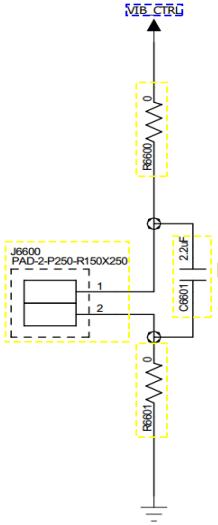

R6600+R6601 are reserved for RF desense,C6601 must place close to VIB PAD

Others 4/7

Unisoc Confidential For longcheer Informal

ADC and BAT_DET

ADC1/ADC2/ADC3/ADC4 support current-source mode. For ADC input, current range is from 1.25μA to160μA, totally 8 steps. ADC input voltage scale is 1.2V or 3V.

- ADC1 for BOARD_TEMP_ADC
- ADC2 for RF_ADC_TEMP
- ADC3 for BOARD_ID_ADC
- ADC4 for CHG_TEMP_ADC

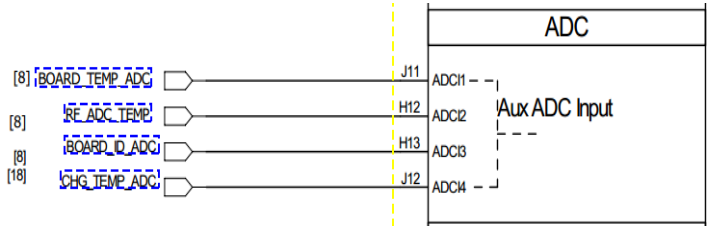

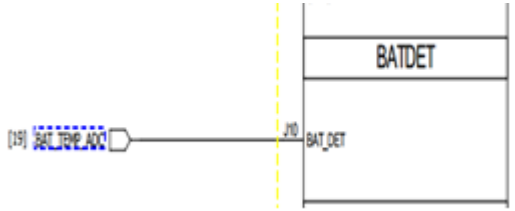

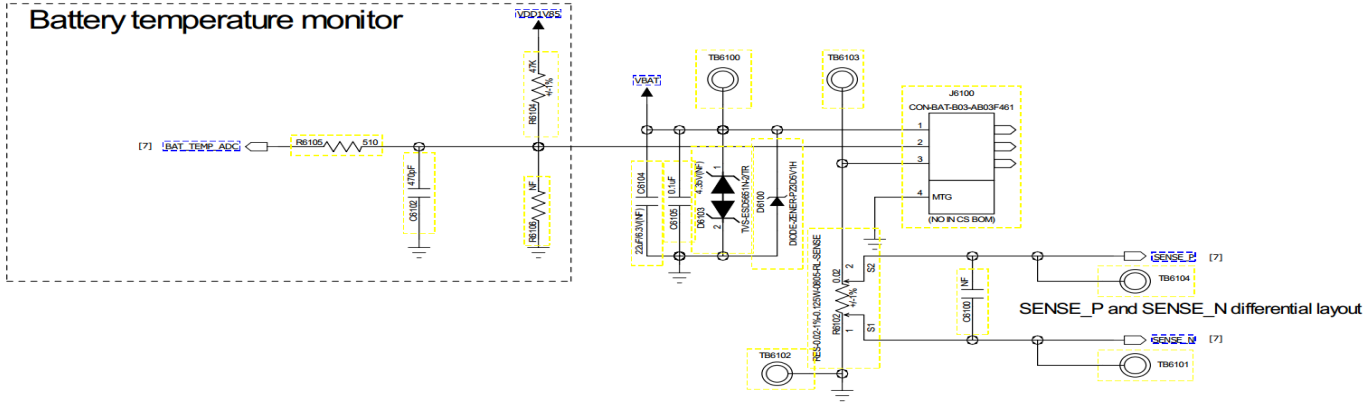

BAT_DET supports ADC function above for battery temperature monitor, and is also used to detect battery presence or not.

Others 5/7

A to D Interface

Unisoc Confidential For longcheer Informal

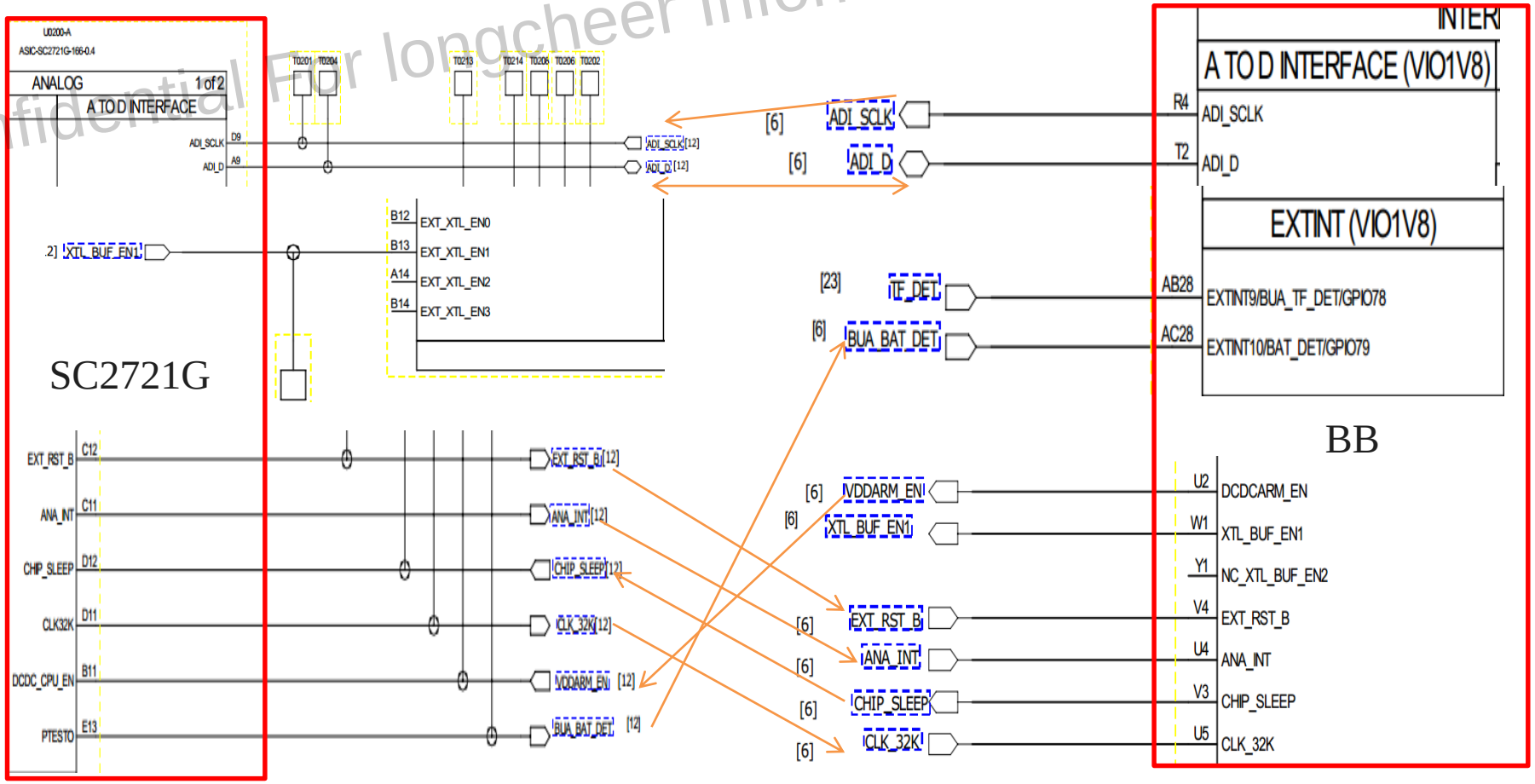

A to D interface between SC2721G and BB above, the same-name nets should be connected together.

- ADI_SCLK/ADI_D: With ADI, BB can set corresponding registers to meet CPU.
- Others: The other nets can finish corresponding function like the net name.

Others 6/7

UNISOC

A to D Interface (Continued)

Unisoc Confidential For longcheer Informal

Ball No.	Ball Name	Description
D9	ADI_SCLK	ADI interface synchronize clock
A9	ADI_D	ADI interface synchronize data
C12	EXT_RST_B	A die reset D die, low active
C11	ANA_INT	A die interrupt to D die, high active
D12	CHIP_SLEEP	A die into deep sleep mode input signal, high active
D11	CLK32K	A die output to D die, 32K clock
E13	PTESTO	A die output to D die, product test mode
L2	CLK26M	A die 26M clock input
B11	DCDC_CPU_EN	DCDCCPU enable input
B12	EXT_XTL_EN0	External wakeup input 0
B13	EXT_XTL_EN1	External wakeup input 1
A14	EXT_XTL_EN2	External wakeup input 2
B14	EXT_XTL_EN3	External wakeup input 3

Others 7/7

Unisoc Confidential For longcheer Informal

System

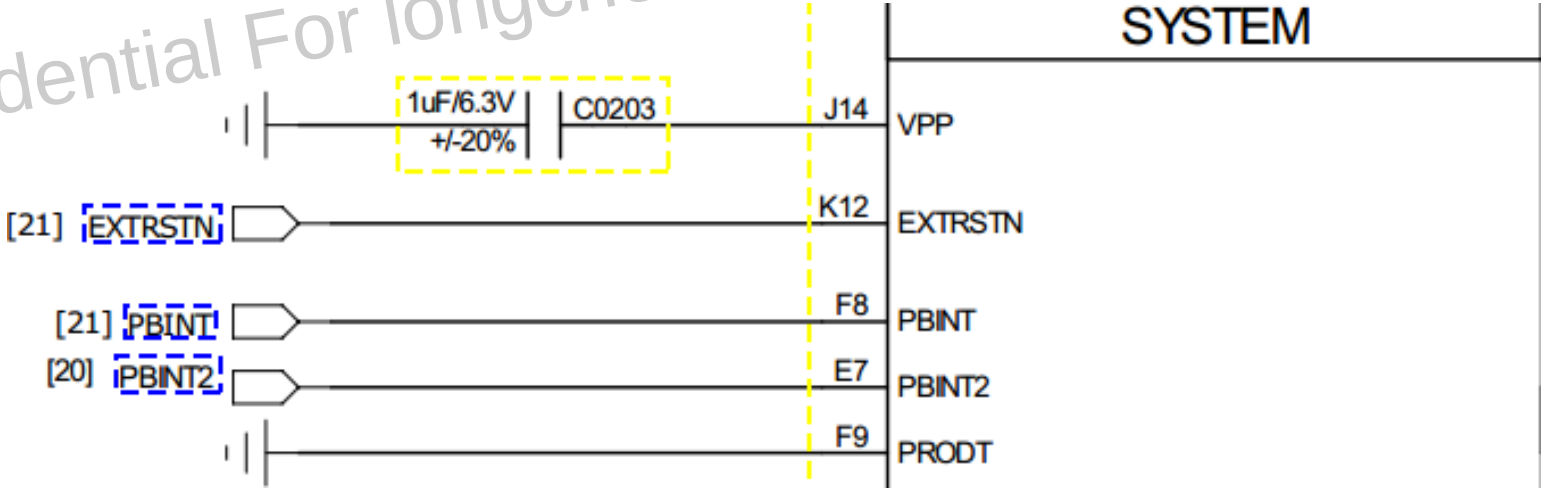

Ball No.	Ball Name	Description
F8	PBINT	Power on 1, usually used for power up.
E7	PBINT2	Power on 2, usually used for auto starting system when connected to GND and the power on.
F9	PRODT	Product test mode selection, 0: normal mode; 1: test mode For customer project, this ball must be connected to GND.
K12	EXTRSTN	System reset input, usually used for volume up.
J14	VPP	Efuse power input.

Unisoc Confidential For longcheer Informal

Thank You

All data and information contained in or disclosed by this document is confidential and proprietary information of UNISOC (Shanghai) Technologies Co., Ltd. (hereafter referred as UNISOC) and all rights therein are expressly reserved. This document is provided for reference purpose, no license (express or implied, by estoppel or otherwise) to any intellectual property rights is granted by this document, and no express and implied warranties, including but without limitation, the implied warranties of fitness for any particular purpose, and non-infringement, as well as any performance. By accepting this material, the recipient agrees that the material and the information contained therein is to be held in confidence and in trust and will not be used, copied, reproduced in whole or in part, nor its contents revealed in any manner to others without the express written permission of UNISOC. UNISOC may make any changes at any time without prior notice. Although every reasonable effort is made to present current and accurate information, UNISOC makes no guarantees of any kind with respect to the matters addressed in this document. In no event shall UNISOC be responsible or liable, directly or indirectly, for any damage or loss caused or alleged to be caused by or in connection with the use of or reliance on any such content.
Please refer to the UNISOC Documents in the UNISOC Deliverables for the use of the Deliverables. Any loss caused by the modification, customization or use of the UNISOC Deliverables in violation of the instructions in the UNISOC Documents shall be undertaken by those who conduct so. The performance indicators, test results and parameters in the UNISOC Deliverables are all obtained in the internal development and test system of UNISOC and are only for the reference. Before using UNISOC Deliverables commercially or conducting mass production of the Deliverables, comprehensive testing and debugging in combination with its own software and hardware test environment are pre-requisite.

UNISOC, , Spreadtrum, SPRD, RDA, and other UNISOC trademarks are trademarks of UNISOC (Shanghai) Technologies Co., Ltd. and/or its affiliated companies.
All other trademarks and trade names mentioned in this document are the property of their respective owners.

This document may include third-party content, including but not limited to third-party information, software, components, and data. UNISOC does not control or assume responsibility for any third-party content, including but not limited to its accuracy, compatibility, reliability, availability, legitimacy, appropriateness, performance, non-infringement, and status update, unless otherwise specified in this document. UNISOC does not provide any guarantee or authorization for the third-party content mentioned or referenced in this document.
User should check the availability of third-party content. If a third-party license is needed, user shall obtain it in an authorized or legal way, unless otherwise specified in this document.